GPO PRICE $

CFSTI PRICE(S) $

Hard copy (HC) 3.00

Microfiche (MF) .65

ff 653 July 65

FACILITY FORM 602

N68-25717 (ACCESSION NUMBER)

(THRU)

297 (PAGES)

1 (CODE)

NASA-CR-[illegible] (NASA CR OR TMX OR AD NUMBER)

02 (CATEGORY)

NASA CR-82003

DESIGN REPORT – THERMAL PROTECTION SYSTEM X-15A-2

By A. B. Price

January 12, 1968

Prepared under Contract No. NAS 4-1212

The Martin Marietta Corporation
Denver, Colorado

for

Flight Research Center
NATIONAL AERONAUTICS AND SPACE ADMINISTRATION

DESIGN REPORT

THERMAL PROTECTION SYSTEM

X-15A - 2

ER 14535

REVISION I
REPRINTED 5-23-68

Prepared by AB Price
A. B. PRICE

Approved by D. V. Sallis
D. V. SALLIS

Rev. 1 by AB Price
A. B. PRICE

1/12/68

THE MARTIN MARIETTA CORPORATION

FOREWORD

This report defines the Mach 7.4 Ablative Thermal Protection System for the X-15A-2 aircraft. It was prepared under NASA Flight Research Center Contract NAS 4-1009 and has been revised in compliance with the requirements of Contract NAS 4-1212.

The following pages, designated by "Rev. 1" were revised in Revision 1 dated 1/12/68.

Title
i
ii
v
vi
viii
xi
xiii
xiv
8
9
10
11
26
27
58.1
58.2
58.3
58.4
69
70
75
76
80
89
90
111
112
113
114
121
122
131
132
135
136
137
138
139
140
141
142
143
144
145
146
147
148
149
150
151
152
153
154
155
156
159
160
161
162
163
164
165
166
169
170
175
176
177
178
179
185
187
188
189
190
191
192
193
199
200
201
202
203
204
205
206
207
208
209

TABLE OF CONTENTS

TABLE OF CONTENTS (cont.)

TABLE OF CONTENTS (cont.)

LIST OF TABLES

LIST OF TABLES (cont.)

LIST OF FIGURES

LIST OF FIGURES (cont.)

LIST OF FIGURES (cont.)

LIST OF FIGURES (cont.)

LIST OF FIGURES (cont.)

LIST OF FIGURES (cont.)

LIST OF SYMBOLS

SYMBOL	DEFINITION	UNITS
c	specific heat	Btu/lb °F
C	chord length	inches
H	enthalpy	Btu/lb
$H_{0^\circ F}$	enthalpy at 0°F = 115	Btu/lb
$H_{0^\circ R}$	enthalpy at 0°R = 0	Btu/lb
H_R	recovery enthalpy	Btu/lb
H_S	Stagnation enthalpy	Btu/lb
H_∞	free stream enthalpy	Btu/lb
K	Arrhenius rate constant	Sec^{-1}
ℓ	length measured from leading edge	inches
L	lower surface	-
n	reaction order	-
q_o	dynamic pressure	Lb/in^2
$q_{0^\circ F}$	heating rate at 0°F	Btu/ft^2 sec
$q_{0^\circ R}$	heating rate at 0°R	Btu/ft^2 sec
R	nose radius	inches
s	surface distance measured from stagnation	inches
T	temperature	°R
U	upper surface	-
V	velocity	ft/sec
W	weight	lbs
α	angle of attack	Degrees
η	recovery factor	-
θ	orientation angle measured from stagnation	Degrees

SYMBOL	DEFINITION	UNITS
λ	weight fraction	-
ρ	density	lb/in^3
τ	time	seconds

SUBSCRIPT	DESCRIPTION
A	ablator property
C	char property
Cal	calorimeter measured value
F	Fahrenheit temperature base
ℓ, L	local condition
O	original condition
p	at constant pressure
P	virgin plastic property
R	recovery value, Rankine temperature base
s, S	skin, stagnation condition
T	total property
∞	free stream condition

I. INTRODUCTION AND SUMMARY

The mission capabilities of the X-15-2 research aircraft will be extended into the hypersonic regime to provide a test bed for ramjet engines, high temperature materials, and structural components. To eliminate the need for extensive aircraft structural modification to accommodate the increased aerodynamic heat load of these missions, an ablative thermal protection system will be used to maintain the existing aircraft within tolerable limits. This report documents the design of such an ablator system to provide aircraft protection for missions to Mach 7.4.

The ablator system described herein is designed around use of the Martin developed MA-25s sprayable ablator. This material is a room temperature vinyl cure, elastomeric silicone based ablator of viscosity suitable for spray application. It is an outgrowth of the ESA 3560 elastomeric based material used for lifting re-entry vehicles, and was formulated primarily for use on complex configuration vehicles such as the X-15.

A spray coating of this MA-25s material, of varying thickness, constitutes the primary ablator application on the aircraft. Local design details and environmental requirements, however, necessitate specialized treatments and materials in certain areas (i.e., leading edges, high bearing load areas, etc.). Premolded details of ESA 3560-IIA, a fiber reinforced elastomeric ablator, and inserts of a load carrying material

(DC 93-027 Modified) are utilized in these areas where environmental requirements exceed the performance capabilities of the sprayable ablator. The general arrangement of the ablation system is shown in Fig. I-1.

A wear layer of DC 90-090 material is used over the ablator application. This is a LOX compatible, tenacious, tear resistant material and is used to provide the relatively friable ablators with a degree of protection from inadvertent damage, and minimize the generation of particulate contamination.

FOLDOUT FRAME 1

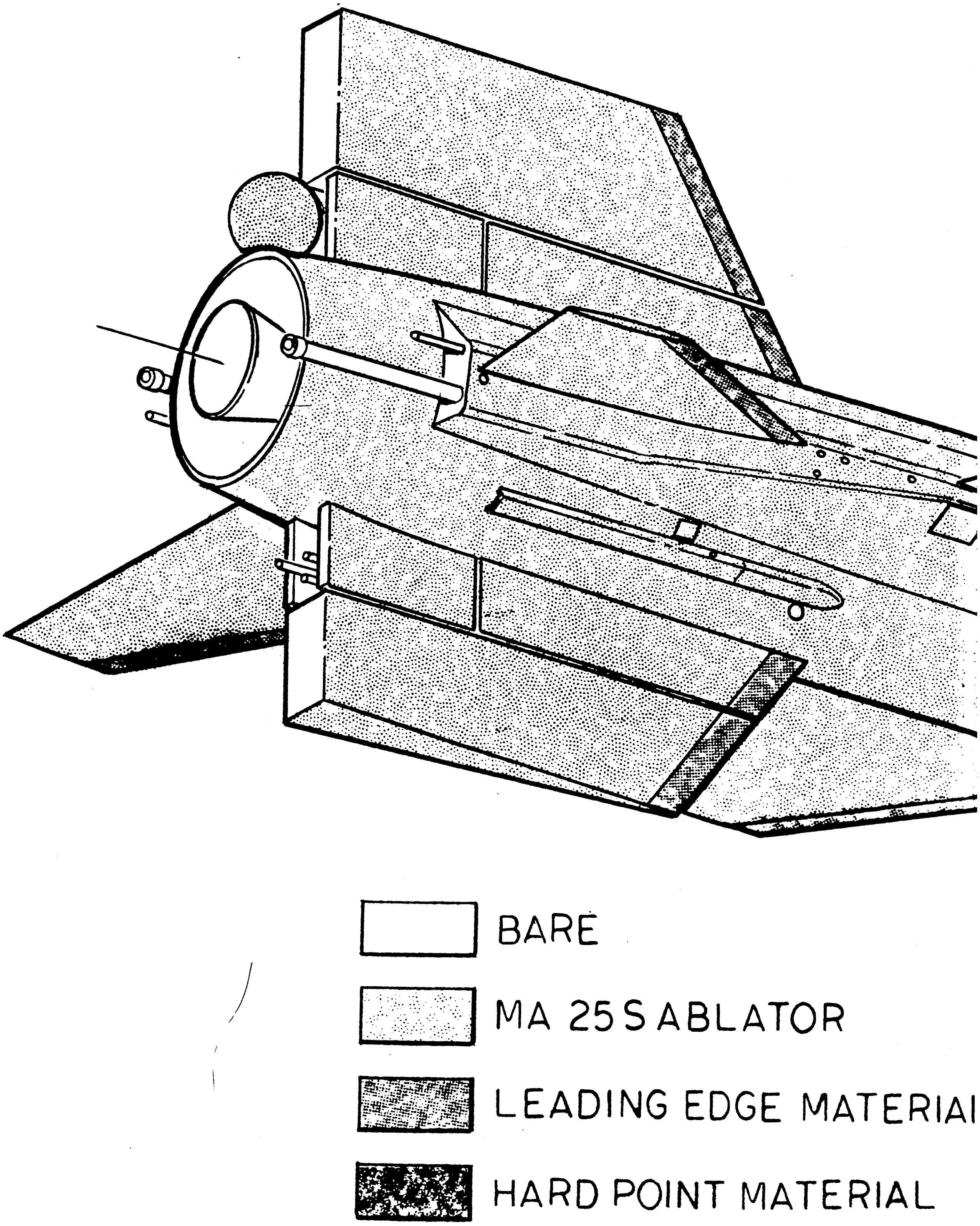

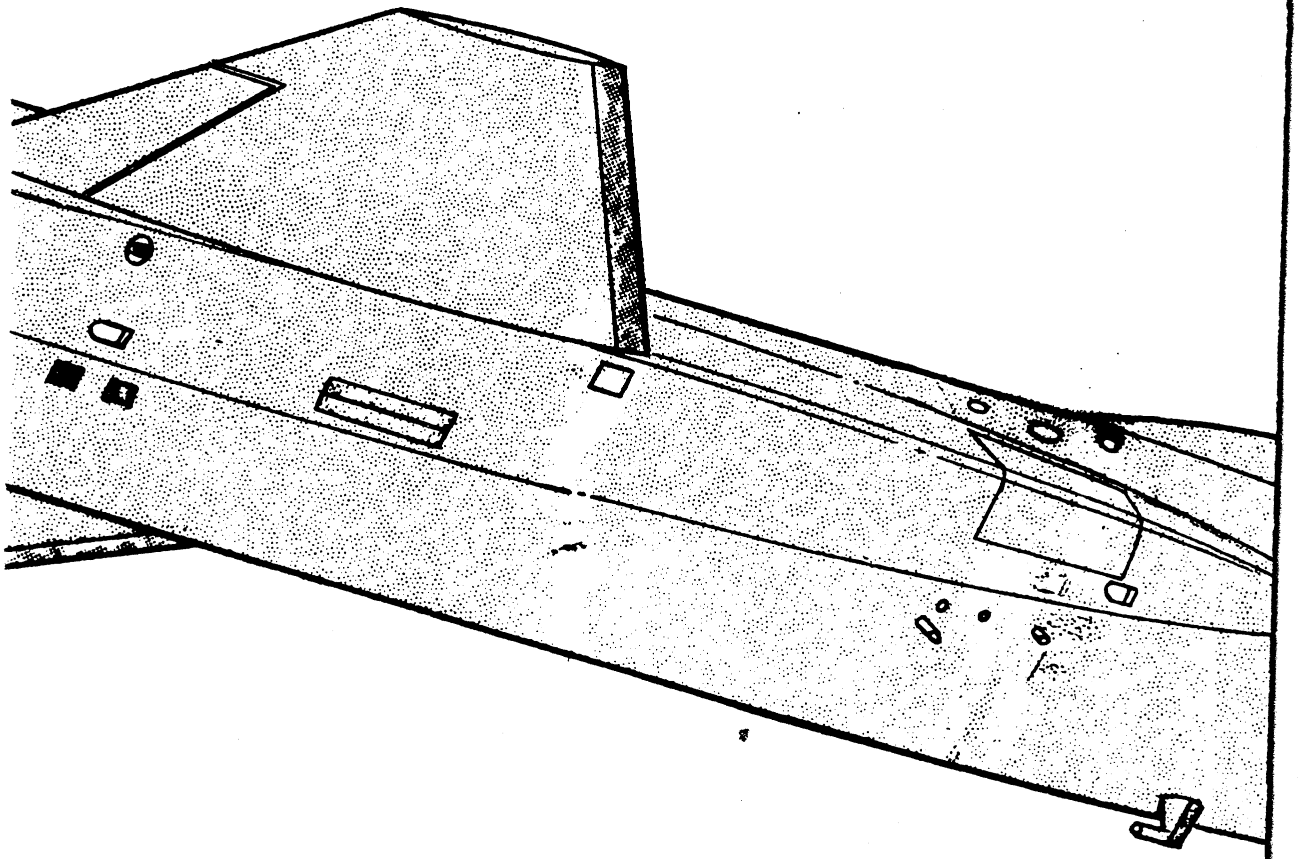

FOLDOUT FRAME 3

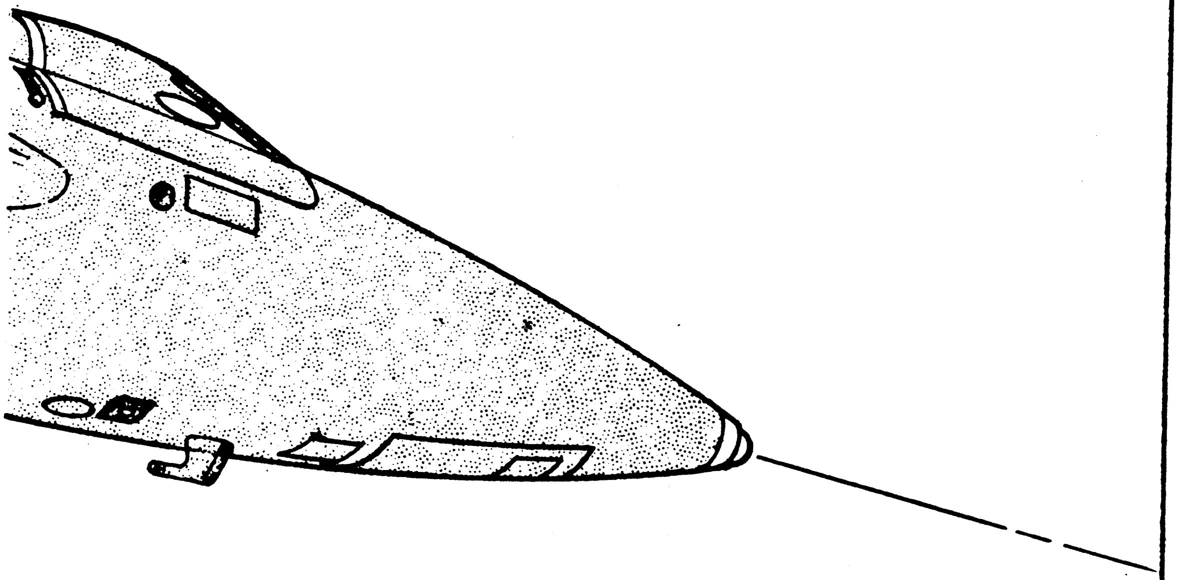

GENERAL ARRANGEMENT
X-15-2 THERMAL PROTECTION SYSTEM
FIGURE I-1

II. SYSTEM DESIGN PARAMETERS

The requirements which govern the design of any thermal protection system can be divided into two categories. Certainly the environmental extremes associated with the design mission establish firm system design goals. Equally influential, however, are the requirements dictated by the configuration and operation of the vehicle to be protected. This report section defines these parameters as applicable to the design of an ablator system for the X-15-2 aircraft, and they are summarized in Table II-1.

A. Basic System Requirements

The configuration of the X-15-2 aircraft, with its many unique design features, establishes a wide range of requirements to be satisfied by the protection system. Its complex shape and rapid contour changes necessitate use of flexible ablator materials, and strongly suggests spray application. The conventional landing mode of the aircraft also requires maintenance of the aerodynamic shape of its lift and control surfaces after thermal exposure. Structural adequacy of the ablator is a factor at locations subject to high bearing loads, and the aircraft system fluids require diverse compatibility and exposure to cryogenic temperatures.

In addition, the ablation system must not impede or affect, in any way, the function or performance of the aircraft systems, and flight plans and scheduling of the X-15A-2 would be enhanced by use of ablator materials which were easily applied and removed to minimize system turn around time requirements.

B. System Environmental Requirements

The environmental design requirements for the ablation system defined herein, are those associated with a Mach 7.4 mission trajectory as supplied by NASA. This mission profile is presented in Table II-2, and the pertinent trajectory parameters are shown in Fig. II-1. In addition, the calculated aerodynamic heating data was supplied for a number of discrete locations over the aircraft. These locations, for the most part, coincide with existing thermocouple locations on the aircraft and their distribution is shown in Fig. II-2. The actual location of these points over the aircraft is tabulated in Table II-3. The numbers assigned to the data points are the corresponding thermocouple designations, and these identifications are used consistently throughout this report whenever reference is made to the data points.

The calculated heating rates, as received, were "cold wall" values using a base temperature of 0° F. The computational programs available at Martin for ablator performance analysis utilize "cold wall" heating rates with a base temperature of 0° R. The received values, therefore, were corrected for this base temperature difference by the following relationship:

$$\dot{q}_{0^\circ R} = \dot{q}_{0^\circ F} \left(\frac{H_R - H_{0^\circ R}}{H_R - H_{0^\circ F}} \right)$$

where

$\dot{q}_{0° R}$ - heating rate at 0° R in Btu/ft^2-sec

$\dot{q}_{0° F}$ - heating rate at 0° F in Btu/ft^2-sec

H_R - recovery enthalpy $= \eta V^2/2gj + H_\infty$ in Btu/lb

H_∞ - free stream enthalpy of air in Btu/lb

$H_{0° R}$ - enthalpy at 0° R = 0 Btu/lb

$H_{0° F}$ - enthalpy at 0° F = 115 Btu/lb

η - recovery factor assumed 1 for conservative design

This correction factor, though trajectory time dependent, is insensitive to location on the aircraft (η assumed = 1). The same factors were, therefore, applied to heating profiles at all the data points. The calculated values for this factor are shown in Table II-4 for a number of trajectory times. Tables II-5 thru II-8 give both the "as received" heating rates and the values after correction to the 0° R base for all the aircraft data points. Also included is the total trajectory heat load (0° R base) at each data point.

Table II-9 presents the heating information for two points on the vane antennas of the aircraft. The data shown is actually that associated with the original Mach 8 design trajectory, but it was decided not to modify the antenna's original ablator design since the economic investment for a new analysis and revised tooling could not be offset by any significant system weight reduction.

TABLE II-1

X-15-2 ABLATOR MATERIAL REQUIREMENTS

Location	Environmental Requirements	Design Requirements	Material Requirements	Material Selected
Leading Edges	Cold wall heating rates (0° F) up to 160 Btu/ft^2-sec. Pressures to 0. 75 atm. Stag. enthalpy 1300 Btu/lb. Shear to 16 psf. Enthalpy of 1300 Btu/lb.	Appl. without heat. appl. over aerodyn. & irregular surface Maintenance of aerodynamic shape	Room temp. bond. Nominal part flex. Pre-molded & controlled contour Essentially zero recession & shape change. Tenacious char to virgin interface. Low molding pressure to simplify tooling.	ESA 3560-IIA, mold. details
Hard Points	Cold wall heating rates (0° F) to 12 Btu/ft^2-sec. Pressures to 0. 01 atm. Enthalpy of 1200 Btu/lb. shear to 2 psf. Compression loads to 1500 psi at room temp. prior to thermal expos.	Appl. without heat. Appl. over irregular surfaces. Structural adequacy -- no local thermal gradients under hard point insert. Aerodyn. smooth with surroundings.	Room temp. cure Trowellable matl at installation. High bearing strength after cure. Same thermal protection as adjacent ablator when installed in equal thickness self bonding.	DC93-027
Main Surface of A/C	Cold wall heating rates (0° F) to 15 Btu/ft^2-sec. Pressures to 0. 1 atm. Enthalpy to 1200 Btu/lb. Shear to 6 psf.	Appl. without external heating. Appl. over irregular & highly contoured surfaces. Efficient for low enthalpy - low heating rate environ. Installation over cryogenic tank. Bond line strength at 500° F. Repairable or replaceable instal.	Room temp. cure matl. Sprayable appl. Good insulator of very low density. Low temp strain capability. Good thermal stab. of matl and bond. Easily removed & simple surface prep.	MA-25s

TABLE II-1 (cont.)

Location	Environmental Requirements	Design Requirements	Material Requirements	Material Selected
Repair of damaged areas	Cold wall heating rates (0°F) to 15 Btu/ft^2-sec. Pressures to 0.1 atm. Enthalpy to 1200 Btu/lb. Shear to 6 psf.	Appl. without external heating. Application over irreg. surfaces. No local temp. grad. under repair insert. Aerodyn. smooth with surrounding matl. Installation shortly before take-off. No separation from surrounding matl.	Room temp cure. Trowellable matl at instal. Same thermal protection as basic ablator in same thickness. Short cure time. Good thermal stability.	MA-25s
Access panel edge fasteners	Cold wall heating rates (0°F) to 15 Btu/ft^2-sec. Pressures to 0.1 atm. Enthalpy to 1200 Btu/lb. Shear to 6 psf. Exposure to cryogenic temperatures.	Appl. without external heat over irreg. and contoured surfaces. No thermal gradient with surrounding ablator. Durability to withstand the rigors of panel replacement and handling.	Room temp bond. Good flexibility at instal. and a low temp. strain capability when installed. Same ablative properties as other matls. Reasonable toughness and not subject to generation of small particles when abraded.	MA-25s-1 strips bonded with DC 93-027 adhesive
Exterior surface of ablator materials	Cold wall heating rates (0°F) to 160 BTU/ft^2-sec. Pressure to 0.75 atm. Stagnation enthalpy of 1300 BTU/lb. Shear to 16 psf.	Easily applied without external heat over irreg. surfaces. Provide durability for ablator matls during normal aircraft maintenance and servicing. Be LOX compatible.	Room temp cure. Spray applied. Provide a tenacious, tear resistant layer over ablator matls. Be compatible with ablator matls and not alter or impede their thermal performance.	DC 90-090

TABLE II-2
X-15A-2 MAXIMUM VELOCITY FLIGHT

TRAJECTORY PARAMETERS

TIME (SECONDS)	ALTITUDE (FEET)	VELOCITY (FEET/SECOND)	ENTHALPY (BTU/POUND)
0.	45000.	800.	102.78
10.	43000.	1150.	116.42
20.	42000.	1400.	129.15
30.	42500.	1500.	134.94
40.	45000.	1600.	141.14
50.	52000.	1700.	147.73
60.	60000.	1900.	162.11
70.	68000.	2200.	186.69
80.	77000.	2600.	225.04
90.	83000.	3000.	271.79
100.	90000.	3600.	356.90
110.	95000.	4200.	456.40
120.	97500.	4800.	567.27
130.	98000.	5600.	734.49
140.	99000.	6300.	901.90
150.	101000.	7100.	1118.05
160.	102500.	7100.	1119.05
170.	103750.	7000.	1092.89
180.	105000.	6900.	1066.12
190.	105000.	6750.	1025.21
200.	105000.	6600.	985.21
210.	103750.	6500.	958.04
220.	102500.	6300.	905.90
230.	101750.	6200.	879.92
240.	101000.	6000.	830.18
250.	99500.	5900.	804.41
260.	98000.	5750.	768.50
270.	97000.	5600.	733.49
280.	96000.	5400.	688.53
290.	94500.	5200.	644.18
300.	93000.	5000.	601.43
310.	90250.	4700.	540.29
320.	87500.	4450.	491.60
330.	85250.	4200.	446.40
340.	83000.	3900.	395.85
350.	80500.	3600.	348.90
360.	78000.	3400.	320.93
370.	74500.	3200.	294.56
380.	71000.	2900.	258.00
390.	67000.	2700.	235.63
400.	63000.	2500.	214.85

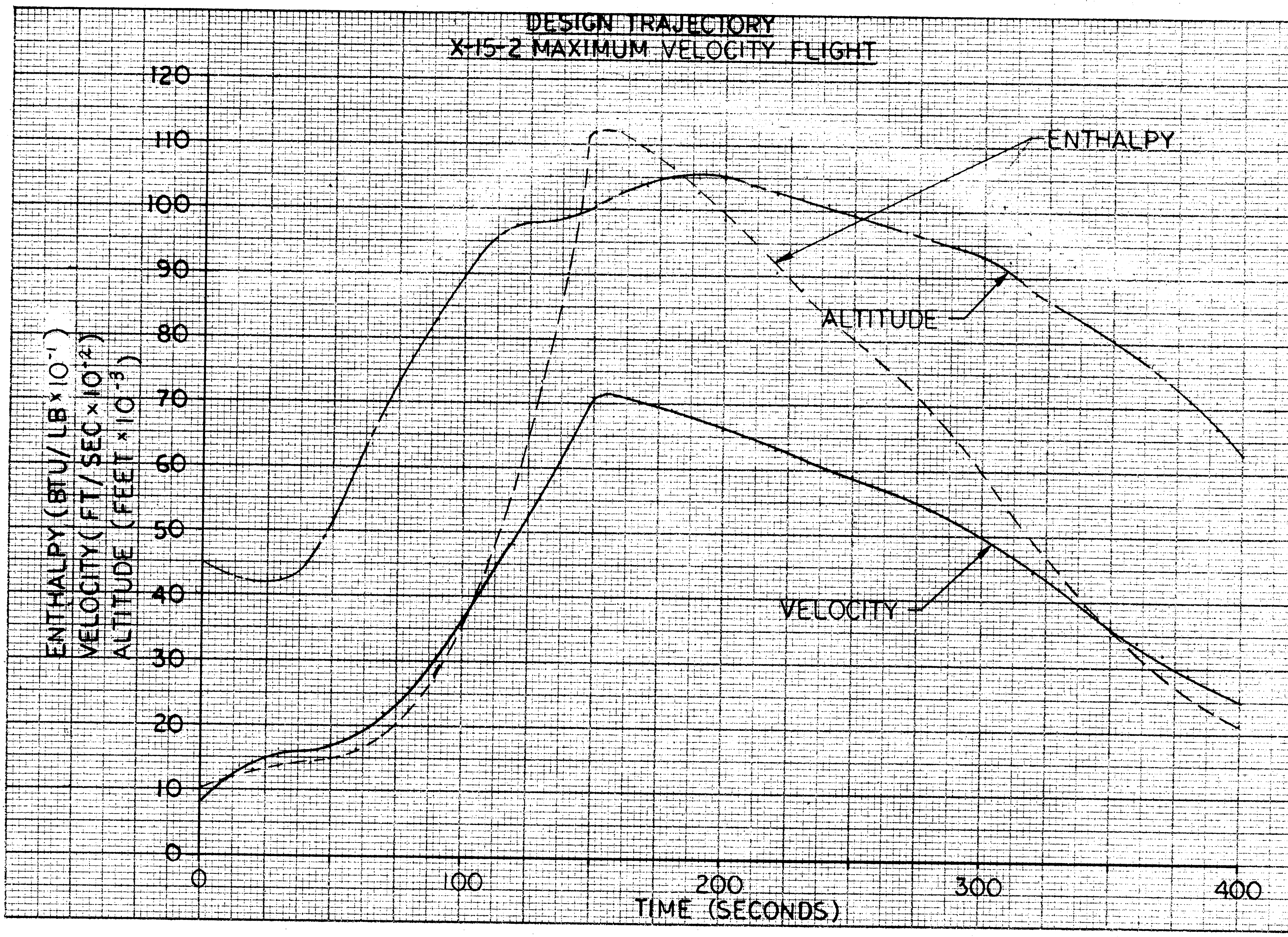

DESIGN TRAJECTORY
X-15-2 MAXIMUM VELOCITY FLIGHT

FIG. II-1

AERO-HEATING DATA POINTS

X-15

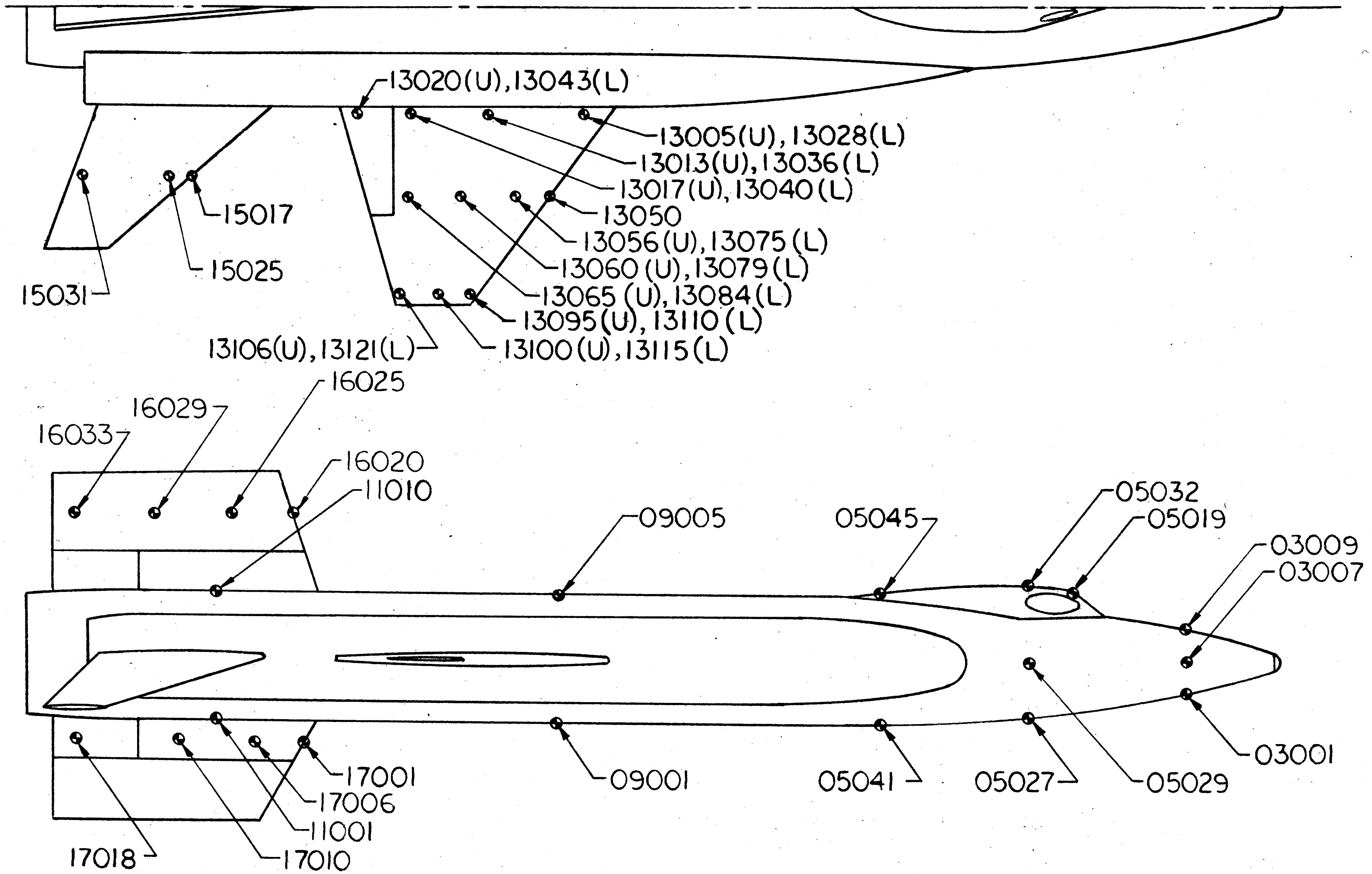

FIGURE II-2

TABLE II-3

AERO HEATING DATA POINT LOCATIONS
X-15 AIRCRAFT

Point Ident.	Location	Percent Chord (X/L)	Surface
	Fuselage		
03001	Sta. 26	.063	Lower centerline
03007	Sta. 26	.063	Right side
03009	Sta. 26	.063	Upper centerline
05019	Sta. 99	--	Leading edge
05027	Sta. 117	.221	Lower centerline
05029	Sta. 117	.221	Right side
05032	Sta. 117	.221	Upper centerline
05041	Sta. 182	.329	Lower centerline
05045	Sta. 182	.329	Upper centerline
09001	Sta. 335	.588	Lower centerline
09005	Sta. 335	.588	Upper centerline
11001	Sta. 490	.847	Lower centerline
11010	Sta. 490	.847	Upper centerline
	Wing		
13005	Sta. 47.9	.055	Upper
13013	Sta. 47.9	.462	Upper
13017	Sta. 47.9	.744	Upper
13020	Sta. 47.9	.938	Upper
13028	Sta. 47.9	.055	Lower
13036	Sta. 47.9	.462	Lower
13040	Sta. 47.9	.744	Lower
13043	Sta. 47.9	.938	Lower
13050	Sta. 84.5	--	Leading edge
13056	Sta. 84.5	.190	Upper
13060	Sta. 84.5	.460	Upper
13065	Sta. 84.5	.880	Upper
13075	Sta. 84.5	.190	Lower
13079	Sta. 84.5	.460	Lower
13084	Sta. 84.5	.880	Lower
13095	Sta. 127.7	.105	Upper
13100	Sta. 127.7	.475	Upper
13106	Sta. 127.7	.912	Upper
13110	Sta. 127.7	.105	Lower
13115	Sta. 127.7	.475	Lower
13121	Sta. 127.7	.912	Lower

TABLE II-3 (cont.)

Point Ident.	Location	Percent Chord (X/L)	Surface
	Upper Vertical Fin		
16020	WL 62	--	Leading edge
16025	WL 62	.250	Right side
16029	WL 62	.583	Right side
16033	WL 62	.910	Right side
	Ventral Fin		
17001	WL -40.3	--	Leading edge
17006	WL -40.3	.199	Right side
17010	WL -37.8	.502	Right side
17018	WL -35.2	.900	Right side
	Horizontal Stabilizer		
15017	B.P. 75.5	--	Leading edge
15025	B.P. 75.5	.190	Lower surface
15031	B.P. 75.5	.900	Lower surface

TABLE II-4
X-15A-2 MAXIMUM VELOCITY FLIGHT

FACTORS FOR CHANGING HEATING RATES TO 0 DEGREE RANKINE BASE

TRAJECTORY TIME	CORRECTION FACTOR
0.	1.00
10.	18.04
20.	9.12
30.	6.76
40.	5.39
50.	4.51
60.	3.44
70.	2.60
80.	2.04
90.	1.73
100.	1.47
110.	1.33
120.	1.25
130.	1.18
140.	1.14
150.	1.11
160.	1.11
170.	1.11
180.	1.12
190.	1.12
200.	1.13
210.	1.13
220.	1.14
230.	1.15
240.	1.16
250.	1.16
260.	1.17
270.	1.18
280.	1.20
290.	1.21
300.	1.23
310.	1.27
320.	1.30
330.	1.34
340.	1.40
350.	1.49
360.	1.55
370.	1.64
380.	1.80
390.	1.95
400.	2.15

TABLE II-5
X-15A-2 MAXIMUM VELOCITY FLIGHT

FUSELAGE
AERODYNAMIC HEATING PROFILES

THERMOCOUPLE LOCATION 3001 TOTAL HEAT 5093. BTU/FT2

TRAJECTORY TIME (SECONDS)	HEATING RATE (FAHRENHEIT BASE) (BTU/FT2 SEC)	HEATING RATE (RANKINE BASE) (BTU/FT2 SEC)
0.	0.00	0.00
10.	0.27	4.87
20.	0.90	8.21
30.	1.22	8.25
40.	1.47	7.93
50.	1.30	5.86
60.	1.42	4.88
70.	1.50	3.90
80.	1.97	4.02
90.	2.60	4.50
100.	3.38	4.98
110.	4.23	5.65
120.	6.22	7.80
130.	13.95	16.53
140.	18.45	21.14
150.	21.78	24.27
160.	22.13	24.66
170.	19.97	22.31
180.	18.35	20.56
190.	20.87	23.50
200.	17.02	19.26
210.	20.76	23.59
220.	19.48	22.31
230.	17.40	20.01
240.	15.56	18.06
250.	15.61	18.21
260.	16.18	19.02
270.	15.42	18.28
280.	12.56	15.07
290.	10.82	13.17
300.	10.30	12.73
310.	10.12	12.85
320.	9.93	12.96
330.	9.08	12.23
340.	7.28	10.26
350.	5.40	8.05
360.	4.77	7.43
370.	3.95	6.47
380.	3.38	6.09
390.	3.15	6.15
400.	2.87	6.17

TABLE II-5 (CONT.)
X-15A-2 MAXIMUM VELOCITY FLIGHT

FUSELAGE
AERODYNAMIC HEATING PROFILES

THERMOCOUPLE LOCATION 3007 TOTAL HEAT 3328. BTU/FT2

TRAJECTORY TIME (SECONDS)	HEATING RATE (FAHRENHEIT BASE) (BTU/FT2 SEC)	HEATING RATE (RANKINE BASE) (BTU/FT2 SEC)
0.	0.00	0.00
10.	0.24	4.32
20.	0.76	6.93
30.	1.01	6.83
40.	1.19	6.42
50.	1.13	5.09
60.	1.23	4.23
70.	1.45	3.77
80.	1.75	3.57
90.	2.16	3.74
100.	2.86	4.21
110.	3.73	4.98
120.	5.08	6.37
130.	8.18	9.69
140.	11.20	12.83
150.	14.79	16.48
160.	14.08	15.69
170.	12.74	14.23
180.	11.74	13.15
190.	11.20	12.61
200.	10.29	11.64
210.	10.63	12.08
220.	10.03	11.48
230.	9.49	10.91
240.	9.02	10.47
250.	9.07	10.58
260.	8.94	10.51
270.	8.56	10.15
280.	7.85	9.42
290.	7.22	8.78
300.	6.93	8.56
310.	6.51	8.27
320.	6.13	8.00
330.	5.69	7.66
340.	4.89	6.89
350.	4.11	6.13
360.	3.86	6.01
370.	3.57	5.85
380.	3.09	5.57
390.	2.90	5.66
400.	2.67	5.74

TABLE II-5 (CONT.)
X-15A-2 MAXIMUM VELOCITY FLIGHT

FUSELAGE
AERODYNAMIC HEATING PROFILES

HERMOCOUPLE LOCATION 3009 TOTAL HEAT 2082. BTU/FT2

TRAJECTORY TIME (SECONDS)	HEATING RATE (FAHRENHEIT BASE) (BTU/FT2 SEC)	HEATING RATE (RANKINE BASE) (BTU/FT2 SEC)
0.	0.00	0.00
10.	0.22	3.96
20.	0.68	6.20
30.	0.88	5.95
40.	1.02	5.50
50.	1.01	4.55
60.	1.08	3.71
70.	1.41	3.67
80.	1.56	3.19
90.	1.80	3.12
100.	2.42	3.57
110.	3.28	4.38
120.	4.09	5.12
130.	4.21	4.99
140.	5.98	6.85
150.	9.26	10.32
160.	7.98	8.89
170.	7.26	8.11
180.	6.72	7.53
190.	4.75	5.35
200.	5.43	6.14
210.	4.15	4.71
220.	4.00	4.58
230.	4.23	4.86
240.	4.50	5.22
250.	4.55	5.30
260.	4.14	4.86
270.	4.03	4.77
280.	4.47	5.36
290.	4.52	5.50
300.	4.40	5.44
310.	3.93	4.99
320.	3.54	4.62
330.	3.38	4.55
340.	3.20	4.51
350.	3.10	4.62
360.	3.12	4.86
370.	3.23	5.29
380.	2.82	5.08
390.	2.67	5.21
400.	2.48	5.33

TABLE II-5 (CONT.)
X-15A-2 MAXIMUM VELOCITY FLIGHT

FUSELAGE
AERODYNAMIC HEATING PROFILES

THERMOCOUPLE LOCATION 5019 TOTAL HEAT 5448. BTU/FT2

TRAJECTORY TIME (SECONDS)	HEATING RATE (FAHRENHEIT BASE) (BTU/FT2 SEC)	HEATING RATE (RANKINE BASE) (BTU/FT2 SEC)
0.	0.00	0.00
10.	0.70	12.62
20.	1.20	10.94
30.	1.50	10.14
40.	1.75	9.44
50.	2.00	9.02
60.	2.20	7.56
70.	2.50	6.51
80.	3.00	6.13
90.	3.80	6.58
100.	5.10	7.52
110.	6.60	8.82
120.	8.90	11.16
130.	12.70	15.05
140.	18.03	20.66
150.	25.12	27.99
160.	24.25	27.02
170.	22.39	25.02
180.	20.91	23.43
190.	19.51	21.97
200.	18.17	20.57
210.	17.92	20.36
220.	16.62	19.03
230.	15.79	18.16
240.	14.74	17.11
250.	14.47	16.88
260.	18.81	22.12
270.	13.00	15.41
280.	11.85	14.22
290.	10.76	13.09
300.	9.96	12.31
310.	8.77	11.14
320.	7.81	10.19
330.	6.88	9.26
340.	5.67	7.99
350.	4.58	6.83
360.	4.08	6.35
370.	7.17	11.76
380.	5.68	10.24
390.	4.92	9.61
400.	4.16	8.95

TABLE II-5(CONT.)
X-15A-2 MAXIMUM VELOCITY FLIGHT

FUSELAGE
AERODYNAMIC HEATING PROFILES

THERMOCOUPLE LOCATION 5027 TOTAL HEAT 2130. BTU/FT2

TRAJECTORY TIME (SECONDS)	HEATING RATE (FAHRENHEIT BASE) (BTU/FT2 SEC)	HEATING RATE (RANKINE BASE) (BTU/FT2 SEC)
0.	0.00	0.00
10.	0.18	3.24
20.	0.57	5.20
30.	0.76	5.14
40.	0.90	4.85
50.	0.78	3.52
60.	0.82	2.82
70.	0.84	2.18
80.	1.00	2.04
90.	1.24	2.14
100.	1.48	2.18
110.	1.71	2.28
120.	2.37	2.97
130.	5.57	6.60
140.	7.00	8.02
150.	7.59	8.46
160.	7.97	8.88
170.	7.21	8.05
180.	6.64	7.44
190.	8.23	9.26
200.	6.40	7.24
210.	8.43	9.57
220.	7.95	9.10
230.	6.96	8.00
240.	6.12	7.10
250.	6.16	7.18
260.	6.57	7.72
270.	6.29	7.45
280.	4.95	5.94
290.	4.22	5.13
300.	4.07	5.03
310.	4.15	5.27
320.	4.21	5.49
330.	3.91	5.26
340.	3.17	4.46
350.	2.38	3.55
360.	2.14	3.33
370.	1.83	3.00
380.	1.65	2.97
390.	1.60	3.12
400.	1.52	3.27

TABLE II-5 (CONT.)
X-15A-2 MAXIMUM VELOCITY FLIGHT

FUSELAGE
AERODYNAMIC HEATING PROFILES

THERMOCOUPLE LOCATION 5029 TOTAL HEAT 1273. BTU/FT2

TRAJECTORY TIME (SECONDS)	HEATING RATE (FAHRENHEIT BASE) (BTU/FT2 SEC)	HEATING RATE (RANKINE BASE) (BTU/FT2 SEC)
0.	0.00	0.00
10.	0.16	2.88
20.	0.49	4.47
30.	0.64	4.32
40.	0.75	4.04
50.	0.70	3.15
60.	0.73	2.51
70.	0.82	2.13
80.	0.91	1.86
90.	1.05	1.82
100.	1.26	1.85
110.	1.50	2.00
120.	1.88	2.35
130.	2.75	3.26
140.	3.52	4.03
150.	4.35	4.84
160.	4.15	4.62
170.	3.79	4.23
180.	3.52	3.94
190.	3.41	3.84
200.	3.17	3.58
210.	3.30	3.75
220.	3.17	3.63
230.	3.02	3.47
240.	2.92	3.38
250.	2.96	3.45
260.	2.96	3.48
270.	2.88	3.41
280.	2.70	3.24
290.	2.54	3.09
300.	2.49	3.07
310.	2.43	3.08
320.	2.36	3.08
330.	2.26	3.04
340.	2.03	2.86
350.	1.79	2.67
360.	1.75	2.72
370.	1.68	2.75
380.	1.54	2.77
390.	1.50	2.92
400.	1.43	3.07

TABLE II-5 (CONT.)
X-15A-2 MAXIMUM VELOCITY FLIGHT

FUSELAGE
AERODYNAMIC HEATING PROFILES

THERMOCOUPLE LOCATION 5032 TOTAL HEAT 1037. BTU/FT2

TRAJECTORY TIME (SECONDS)	HEATING RATE (FAHRENHEIT BASE) (BTU/FT2 SEC)	HEATING RATE (RANKINE BASE) (BTU/FT2 SEC)
0.	0.00	0.00
10.	0.15	2.70
20.	0.47	4.28
30.	0.61	4.12
40.	0.70	3.77
50.	0.66	2.97
60.	0.76	2.61
70.	0.81	2.10
80.	0.86	1.75
90.	0.94	1.62
100.	1.12	1.65
110.	1.35	1.80
120.	1.56	1.95
130.	1.61	1.90
140.	1.96	2.24
150.	2.57	2.86
160.	5.42	6.04
170.	4.92	5.49
180.	4.55	5.10
190.	1.55	1.74
200.	1.72	1.94
210.	1.49	1.69
220.	1.50	1.71
230.	1.56	1.79
240.	1.63	1.89
250.	1.67	1.94
260.	1.61	1.89
270.	1.60	1.89
280.	1.71	2.05
290.	3.09	3.76
300.	3.01	3.72
310.	1.68	2.13
320.	1.63	2.12
330.	1.62	2.18
340.	1.55	2.18
350.	1.49	2.22
360.	1.52	2.36
370.	1.57	2.57
380.	1.45	2.61
390.	1.42	2.77
400.	1.37	2.94

TABLE II-5 (CONT.)
X-15A-2 MAXIMUM VELOCITY FLIGHT

FUSELAGE
AERODYNAMIC HEATING PROFILES

THERMOCOUPLE LOCATION 5041 TOTAL HEAT 1273. BTU/FT2

TRAJECTORY TIME (SECONDS)	HEATING RATE (FAHRENHEIT BASE) (BTU/FT2 SEC)	HEATING RATE (RANKINE BASE) (BTU/FT2 SEC)
0.	0.00	0.00
10.	0.16	2.88
20.	0.49	4.47
30.	0.65	4.39
40.	0.76	4.10
50.	0.66	2.97
60.	0.68	2.33
70.	0.72	1.87
80.	0.80	1.63
90.	0.91	1.57
100.	1.03	1.51
110.	1.15	1.53
120.	1.43	1.79
130.	3.02	3.58
140.	3.56	4.08
150.	3.51	3.91
160.	3.76	4.19
170.	3.43	3.83
180.	3.19	3.57
190.	4.28	4.82
200.	3.20	3.62
210.	4.54	5.15
220.	4.32	4.94
230.	3.72	4.27
240.	3.24	3.76
250.	3.28	3.82
260.	3.59	4.22
270.	3.46	4.10
280.	2.69	3.22
290.	2.32	2.82
300.	2.28	2.81
310.	2.40	3.04
320.	2.50	3.26
330.	2.38	3.20
340.	2.00	2.81
350.	1.58	2.35
360.	1.50	2.33
370.	1.39	2.28
380.	1.30	2.34
390.	1.28	2.50
400.	1.24	2.66

TABLE II-5(CONT.)
X-15A-2 MAXIMUM VELOCITY FLIGHT

FUSELAGE
AERODYNAMIC HEATING PROFILES

THERMOCOUPLE LOCATION 5045 TOTAL HEAT 843. BTU/FT2

TRAJECTORY TIME (SECONDS)	HEATING RATE (FAHRENHEIT BASE) (BTU/FT2 SEC)	HEATING RATE (RANKINE BASE) (BTU/FT2 SEC)
0.	0.00	0.00
10.	0.14	2.52
20.	0.44	4.01
30.	0.57	3.85
40.	0.66	3.56
50.	0.62	2.79
60.	0.65	2.23
70.	0.72	1.87
80.	0.73	1.49
90.	0.85	1.47
100.	0.98	1.44
110.	1.11	1.48
120.	1.30	1.63
130.	1.52	1.80
140.	1.82	2.08
150.	2.19	2.44
160.	2.01	2.24
170.	1.87	2.08
180.	1.76	1.97
190.	1.46	1.64
200.	1.60	1.81
210.	1.70	1.93
220.	1.68	1.92
230.	1.64	1.88
240.	1.63	1.89
250.	1.66	1.93
260.	1.68	1.97
270.	1.67	1.98
280.	1.62	1.94
290.	1.58	1.92
300.	1.59	1.96
310.	1.56	1.98
320.	1.53	1.99
330.	1.51	2.03
340.	1.45	2.04
350.	1.36	2.02
360.	1.37	2.13
370.	1.36	2.23
380.	1.27	2.29
390.	1.26	2.46
400.	1.23	2.64

TABLE II-5(CONT.)
X-15A-2 MAXIMUM VELOCITY FLIGHT

FUSELAGE
AERODYNAMIC HEATING PROFILES

THERMOCOUPLE LOCATION 9001 TOTAL HEAT 1078. BTU/FT2

TRAJECTORY TIME (SECONDS)	HEATING RATE (FAHRENHEIT BASE) (BTU/FT2 SEC)	HEATING RATE (RANKINE BASE) (BTU/FT2 SEC)
0.	0.00	0.00
10.	0.14	2.52
20.	0.44	4.01
30.	0.58	3.92
40.	0.68	3.67
50.	0.60	2.70
60.	0.62	2.13
70.	0.66	1.71
80.	0.72	1.47
90.	0.82	1.42
100.	0.93	1.37
110.	1.03	1.37
120.	1.26	1.58
130.	2.47	2.92
140.	2.91	3.33
150.	2.93	3.26
160.	3.09	3.44
170.	2.82	3.15
180.	2.62	2.93
190.	3.39	3.81
200.	2.61	2.95
210.	3.58	4.06
220.	3.42	3.91
230.	2.97	3.41
240.	2.63	3.05
250.	2.67	3.11
260.	2.89	3.39
270.	2.80	3.32
280.	2.24	2.68
290.	1.96	2.38
300.	1.94	2.39
310.	2.03	2.57
320.	2.10	2.74
330.	2.01	2.70
340.	1.71	2.41
350.	1.40	2.08
360.	1.34	2.08
370.	1.26	2.06
380.	1.18	2.12
390.	1.17	2.28
400.	1.13	2.43

TABLE II-5 (CONT.)
X-15A-2 MAXIMUM VELOCITY FLIGHT

FUSELAGE
AERODYNAMIC HEATING PROFILES

THERMOCOUPLE LOCATION 9005 TOTAL HEAT 707. BTU/FT2

TRAJECTORY TIME (SECONDS)	HEATING RATE (FAHRENHEIT BASE) (BTU/FT2 SEC)	HEATING RATE (RANKINE BASE) (BTU/FT2 SEC)
0.	0.00	0.00
10.	0.13	2.34
20.	0.40	3.64
30.	0.52	3.51
40.	0.59	3.18
50.	0.57	2.57
60.	0.59	2.02
70.	0.66	1.71
80.	0.70	1.43
90.	0.77	1.33
100.	0.88	1.29
110.	1.00	1.33
120.	1.16	1.45
130.	1.22	1.44
140.	1.48	1.69
150.	1.86	2.07
160.	1.65	1.83
170.	1.53	1.70
180.	1.45	1.62
190.	1.00	1.12
200.	1.28	1.44
210.	0.87	0.98
220.	0.92	1.05
230.	1.08	1.24
240.	1.21	1.40
250.	1.24	1.44
260.	1.15	1.35
270.	1.15	1.36
280.	1.32	1.58
290.	1.35	1.64
300.	1.37	1.69
310.	1.33	1.68
320.	1.28	1.67
330.	1.29	1.73
340.	1.26	1.77
350.	1.22	1.81
360.	1.23	1.91
370.	1.23	2.01
380.	1.16	2.09
390.	1.15	2.24
400.	1.12	2.40

TABLE II-5 (CONT.)

X-15A-2 MAXIMUM VELOCITY FLIGHT

FUSELAGE
AERODYNAMIC HEATING PROFILES

THERMOCOUPLE LOCATION 11001 TOTAL HEAT 2168 BTU/FT2

TRAJECTORY TIME (SECONDS)	HEATING RATE (FAHRENHEIT BASE) (BTU/FT2 SEC)	HEATING RATE (RANKINE BASE) (BTU/FT2 SEC)
0.	0.00	0.00
10.	0.28	5.04
20.	0.86	7.84
30.	1.14	7.70
40.	1.32	7.12
50.	1.14	5.14
60.	1.18	4.04
70.	1.24	3.22
80.	1.36	2.78
90.	1.56	2.70
100.	1.76	2.58
110.	1.94	2.58
120.	2.42	3.02
130.	5.12	6.06
140.	6.00	6.86
150.	5.90	6.56
160.	6.32	7.04
170.	5.76	6.42
180.	5.36	6.00
190.	7.22	8.12
200.	5.38	6.08
210.	7.68	8.72
220.	7.30	8.36
230.	6.28	7.22
240.	5.46	6.32
250.	5.54	6.46
260.	6.08	7.14
270.	5.88	6.96
280.	4.56	5.46
290.	3.92	4.76
300.	3.86	4.76
310.	4.08	5.18
320.	4.26	5.56
330.	4.06	5.46
340.	3.40	4.78
350.	3.70	4.02
360.	2.56	3.98
370.	2.38	3.90
380.	2.22	4.00
390.	2.20	4.28
400.	2.14	4.60

TABLE II-5 (CONT.)
X-15A-2 MAXIMUM VELOCITY FLIGHT

FUSELAGE
AERODYNAMIC HEATING PROFILES

THERMOCOUPLE LOCATION 11010 TOTAL HEAT 716. BTU/FT2

TRAJECTORY TIME (SECONDS)	HEATING RATE (FAHRENHEIT BASE) (BTU/FT2 SEC)	HEATING RATE (RANKINE BASE) (BTU/FT2 SEC)
0.	0.00	0.00
10.	0.12	2.16
20.	0.38	3.46
30.	0.50	3.38
40.	0.57	3.07
50.	0.54	2.43
60.	0.56	1.92
70.	0.62	1.61
80.	0.66	1.34
90.	0.73	1.26
100.	0.83	1.22
110.	0.94	1.25
120.	1.09	1.36
130.	1.27	1.50
140.	1.52	1.74
150.	1.82	2.02
160.	1.68	1.87
170.	1.55	1.73
180.	1.47	1.64
190.	1.21	1.36
200.	1.33	1.50
210.	1.42	1.61
220.	1.40	1.60
230.	1.37	1.57
240.	1.36	1.57
250.	1.39	1.62
260.	1.41	1.65
270.	1.40	1.66
280.	1.36	1.63
290.	1.33	1.61
300.	1.34	1.65
310.	1.32	1.67
320.	1.29	1.68
330.	1.28	1.72
340.	1.23	1.73
350.	1.16	1.73
360.	1.17	1.82
370.	1.16	1.90
380.	1.09	1.96
390.	1.09	2.12
400.	1.06	2.28

TABLE II-6
X-15A-2 MAXIMUM VELOCITY FLIGHT

WING
AERODYNAMIC HEATING PROFILES

THERMOCOUPLE LOCATION 13005 TOTAL HEAT 1781. BTU/FT2

TRAJECTORY TIME (SECONDS)	HEATING RATE (FAHRENHEIT BASE) (BTU/FT2 SEC)	HEATING RATE (RANKINE BASE) (BTU/FT2 SEC)
0.	0.00	0.00
10.	0.20	3.60
20.	0.65	5.93
30.	0.85	5.74
40.	0.97	5.23
50.	1.09	4.91
60.	1.19	4.09
70.	1.64	4.27
80.	1.71	3.49
90.	1.87	3.24
100.	2.40	3.54
110.	3.08	4.11
120.	3.53	4.42
130.	2.99	3.54
140.	3.95	4.52
150.	5.85	6.52
160.	4.94	5.50
170.	4.58	5.11
180.	4.31	4.83
190.	2.90	3.26
200.	3.56	4.03
210.	4.05	4.60
220.	3.94	4.51
230.	3.83	4.40
240.	3.78	4.38
250.	3.84	4.48
260.	3.85	4.52
270.	3.78	4.48
280.	3.64	4.36
290.	3.50	4.26
300.	3.47	4.29
310.	3.13	3.97
320.	2.83	3.69
330.	2.78	3.74
340.	2.79	3.93
350.	2.91	4.34
360.	3.05	4.75
370.	3.31	5.42
380.	2.99	5.39
390.	2.89	5.64
400.	2.74	5.89

TABLE II-6 (CONT.)

X-15A-2 MAXIMUM VELOCITY FLIGHT

WING

AERODYNAMIC HEATING PROFILES

THERMOCOUPLE LOCATION 13017 TOTAL HEAT 458. BTU/FT2

TRAJECTORY TIME (SECONDS)	HEATING RATE (FAHRENHEIT BASE) (BTU/FT2 SEC)	HEATING RATE (RANKINE BASE) (BTU/FT2 SEC)
0.	0.00	0.00
10.	0.08	1.44
20.	0.29	2.64
30.	0.38	2.57
40.	0.42	2.26
50.	0.48	2.16
60.	0.51	1.75
70.	0.68	1.77
80.	0.64	1.30
90.	0.64	1.10
100.	0.73	1.07
110.	0.85	1.13
120.	0.86	1.07
130.	0.54	0.64
140.	0.68	0.77
150.	0.85	0.94
160.	0.68	0.75
170.	0.65	0.72
180.	0.63	0.70
190.	0.39	0.43
200.	0.55	0.62
210.	0.48	0.54
220.	0.39	0.44
230.	0.46	0.52
240.	0.53	0.61
250.	0.51	0.59
260.	0.49	0.57
270.	0.56	0.66
280.	0.64	0.76
290.	0.69	0.83
300.	0.75	0.92
310.	0.69	0.87
320.	0.65	0.84
330.	0.70	0.94
340.	0.75	1.05
350.	0.85	1.26
360.	0.96	1.49
370.	1.02	1.67
380.	1.08	1.94
390.	1.08	2.10
400.	1.08	2.32

TABLE II-6(CONT.)
X-15A-2 MAXIMUM VELOCITY FLIGHT

WING
AERODYNAMIC HEATING PROFILES

THERMOCOUPLE LOCATION 13020 TOTAL HEAT 438. BTU/FT2

TRAJECTORY TIME (SECONDS)	HEATING RATE (FAHRENHEIT BASE) (BTU/FT2 SEC)	HEATING RATE (RANKINE BASE) (BTU/FT2 SEC)
0.	0.00	0.00
10.	0.08	1.44
20.	0.28	2.55
30.	0.36	2.43
40.	0.41	2.21
50.	0.46	2.07
60.	0.49	1.68
70.	0.66	1.71
80.	0.62	1.26
90.	0.61	1.05
100.	0.70	1.03
110.	0.81	1.08
120.	0.82	1.02
130.	0.52	0.61
140.	0.64	0.73
150.	0.80	0.89
160.	0.65	0.72
170.	0.61	0.68
180.	0.59	0.66
190.	0.37	0.41
200.	0.52	0.58
210.	0.44	0.50
220.	0.37	0.42
230.	0.43	0.49
240.	0.50	0.58
250.	0.48	0.56
260.	0.46	0.54
270.	0.53	0.62
280.	0.61	0.73
290.	0.66	0.80
300.	0.71	0.87
310.	0.66	0.83
320.	0.62	0.80
330.	0.66	0.88
340.	0.71	1.00
350.	0.81	1.20
360.	0.92	1.43
370.	0.98	1.60
380.	1.04	1.87
390.	1.04	2.03
400.	1.04	2.23

TABLE II-6 (CONT.)
X-15A-2 MAXIMUM VELOCITY FLIGHT

WING
AERODYNAMIC HEATING PROFILES

THERMOCOUPLE LOCATION 13028 TOTAL HEAT 4294. BTU/FT2

TRAJECTORY TIME (SECONDS)	HEATING RATE (FAHRENHEIT BASE) (BTU/FT2 SEC)	HEATING RATE (RANKINE BASE) (BTU/FT2 SEC)
0.	0.00	0.00
10.	0.34	6.13
20.	0.66	6.02
30.	0.97	6.56
40.	1.30	7.01
50.	1.63	7.35
60.	1.74	5.98
70.	1.76	4.58
80.	2.22	4.53
90.	2.78	4.81
100.	3.39	5.00
110.	4.00	5.34
120.	5.50	6.89
130.	11.40	13.51
140.	14.35	16.44
150.	16.08	17.92
160.	16.50	18.38
170.	15.03	16.79
180.	13.93	15.61
190.	16.07	18.10
200.	13.19	14.93
210.	16.15	18.35
220.	15.30	17.52
230.	13.75	15.81
240.	12.44	14.44
250.	12.52	14.60
260.	13.06	15.35
270.	12.56	14.89
280.	10.39	12.47
290.	9.09	11.06
300.	8.77	10.84
310.	8.80	11.17
320.	8.77	11.44
330.	8.19	11.03
340.	6.80	9.58
350.	5.28	7.87
360.	4.79	7.46
370.	4.10	6.72
380.	3.63	6.54
390.	3.47	6.77
400.	3.24	6.97

TABLE II-6 (CONT.)
X-15A-2 MAXIMUM VELOCITY FLIGHT

WING
AERODYNAMIC HEATING PROFILES

THERMOCOUPLE LOCATION 13036 TOTAL HEAT 1776. BTU/FT2

TRAJECTORY TIME (SECONDS)	HEATING RATE (FAHRENHEIT BASE) (BTU/FT2 SEC)	HEATING RATE (RANKINE BASE) (BTU/FT2 SEC)
0.	0.00	0.00
10.	0.19	3.42
20.	0.38	3.46
30.	0.56	3.78
40.	0.75	4.04
50.	0.94	4.24
60.	0.97	3.33
70.	0.92	2.39
80.	1.10	2.24
90.	1.32	2.28
100.	1.49	2.19
110.	1.62	2.16
120.	2.13	2.67
130.	4.50	5.33
140.	5.32	6.09
150.	5.39	6.00
160.	5.68	6.33
170.	5.20	5.81
180.	4.84	5.42
190.	6.04	6.80
200.	4.78	5.41
210.	6.28	7.13
220.	6.02	6.89
230.	5.34	6.14
240.	4.79	5.56
250.	4.85	5.65
260.	5.21	6.12
270.	5.06	6.00
280.	4.09	4.91
290.	3.57	4.34
300.	3.51	4.33
310.	3.66	4.64
320.	3.79	4.94
330.	3.61	4.86
340.	3.04	4.28
350.	2.38	3.55
360.	2.19	3.41
370.	1.89	3.10
380.	1.74	3.13
390.	1.71	3.34
400.	1.65	3.55

TABLE II-6(CONT.)
X-15A-2 MAXIMUM VELOCITY FLIGHT

WING
AERODYNAMIC HEATING PROFILES

THERMOCOUPLE LOCATION 13040 TOTAL HEAT 1319. BTU/FT2

TRAJECTORY TIME (SECONDS)	HEATING RATE (FAHRENHEIT BASE) (BTU/FT2 SEC)	HEATING RATE (RANKINE BASE) (BTU/FT2 SEC)
0.	0.00	0.00
10.	0.17	3.06
20.	0.22	2.00
30.	0.49	3.31
40.	0.65	3.50
50.	0.81	3.65
60.	0.82	2.82
70.	0.75	1.95
80.	0.89	1.82
90.	1.04	1.80
100.	1.14	1.68
110.	1.20	1.60
120.	1.53	1.91
130.	3.27	3.87
140.	3.75	4.29
150.	3.62	4.03
160.	3.87	4.31
170.	3.55	3.96
180.	3.32	3.72
190.	4.30	4.84
200.	3.35	3.79
210.	4.54	5.15
220.	4.37	5.00
230.	3.85	4.42
240.	3.44	3.99
250.	3.49	4.07
260.	3.80	4.46
270.	3.70	4.38
280.	2.96	3.55
290.	2.58	3.14
300.	2.56	3.16
310.	2.72	3.45
320.	2.86	3.73
330.	2.75	3.70
340.	2.33	3.28
350.	1.83	2.72
360.	1.69	2.63
370.	1.46	2.39
380.	1.38	2.48
390.	1.37	2.67
400.	1.33	2.86

TABLE II-6(CONT.)

X-15A-2 MAXIMUM VELOCITY FLIGHT

WING

AERODYNAMIC HEATING PROFILES

THERMOCOUPLE LOCATION 13043   TOTAL HEAT 1266. BTU/FT2

TRAJECTORY TIME (SECONDS)	HEATING RATE (FAHRENHEIT BASE) (BTU/FT2 SEC)	HEATING RATE (RANKINE BASE) (BTU/FT2 SEC)
0.	0.00	0.00
10.	0.17	3.06
20.	0.22	2.00
30.	0.49	3.31
40.	0.64	3.45
50.	0.78	3.52
60.	0.79	2.71
70.	0.72	1.87
80.	0.85	1.73
90.	1.00	1.73
100.	1.09	1.60
110.	1.14	1.52
120.	1.46	1.83
130.	3.13	3.71
140.	3.58	4.10
150.	3.46	3.85
160.	3.69	4.11
170.	3.39	3.78
180.	3.17	3.55
190.	4.10	4.61
200.	3.20	3.62
210.	4.34	4.93
220.	4.18	4.78
230.	3.68	4.23
240.	3.29	3.81
250.	3.34	3.89
260.	3.64	4.28
270.	3.54	4.19
280.	2.83	3.39
290.	2.47	3.00
300.	2.45	3.02
310.	2.61	3.31
320.	2.74	3.57
330.	2.64	3.55
340.	2.24	3.15
350.	1.75	2.61
360.	1.62	2.52
370.	1.40	2.29
380.	1.32	2.38
390.	1.31	2.55
400.	1.28	2.75

TABLE II-6(CONT.)

X-15A-2 MAXIMUM VELOCITY FLIGHT

WING

AERODYNAMIC HEATING PROFILES

THERMOCOUPLE LOCATION 13050 TOTAL HEAT 19872. BTU/FT2

TRAJECTORY TIME (SECONDS)	HEATING RATE (FAHRENHEIT BASE) (BTU/FT2 SEC)	HEATING RATE (RANKINE BASE) (BTU/FT2 SEC)
0.	0.00	0.00
10.	0.78	14.07
20.	1.56	14.23
30.	2.10	14.20
40.	2.61	14.09
50.	2.79	12.59
60.	3.53	12.14
70.	4.96	12.91
80.	7.19	14.70
90.	10.14	17.57
100.	15.71	23.17
110.	23.03	30.78
120.	33.35	41.82
130.	54.19	64.24
140.	76.74	87.95
150.	106.47	118.67
160.	102.91	114.69
170.	95.03	106.20
180.	88.73	99.45
190.	83.21	93.72
200.	77.25	87.45
210.	76.65	87.10
220.	71.09	81.42
230.	67.44	77.57
240.	62.85	72.95
250.	61.72	72.01
260.	59.04	69.42
270.	55.59	65.92
280.	50.52	60.64
290.	45.81	55.76
300.	42.39	52.41
310.	37.41	47.52
320.	33.38	43.57
330.	29.42	39.62
340.	24.22	34.13
350.	19.48	29.05
360.	17.31	26.97
370.	15.20	24.93
380.	12.02	21.68
390.	10.38	20.27
400.	8.76	18.84

TABLE II-6 (CONT.)
X-15A-2 MAXIMUM VELOCITY FLIGHT

WING
AERODYNAMIC HEATING PROFILES

THERMOCOUPLE LOCATION 13056   TOTAL HEAT 983. BTU/FT2

TRAJECTORY TIME (SECONDS)	HEATING RATE (FAHRENHEIT BASE) (BTU/FT2 SEC)	HEATING RATE (RANKINE BASE) (BTU/FT2 SEC)
0.	0.00	0.00
10.	0.14	2.52
20.	0.48	4.37
30.	0.61	4.12
40.	0.70	3.77
50.	0.79	3.56
60.	0.85	2.92
70.	1.16	3.02
80.	1.16	2.37
90.	1.21	2.09
100.	1.49	2.19
110.	1.83	2.44
120.	1.99	2.49
130.	1.51	1.79
140.	1.95	2.23
150.	2.68	2.98
160.	2.22	2.47
170.	2.08	2.32
180.	1.98	2.21
190.	1.30	1.46
200.	1.68	1.90
210.	1.45	1.64
220.	1.23	1.40
230.	1.38	1.58
240.	1.53	1.77
250.	1.46	1.70
260.	1.40	1.64
270.	1.55	1.83
280.	1.70	2.04
290.	1.78	2.16
300.	1.86	2.29
310.	1.71	2.17
320.	1.56	2.03
330.	1.60	2.15
340.	1.63	2.29
350.	1.77	2.64
360.	1.91	2.97
370.	1.95	3.19
380.	1.99	3.59
390.	1.94	3.78
400.	1.89	4.06

TABLE II-6(CONT.)
X-15A-2 MAXIMUM VELOCITY FLIGHT

WING
AERODYNAMIC HEATING PROFILES

THERMOCOUPLE LOCATION 13060 TOTAL HEAT 463. BTU/FT2

TRAJECTORY TIME (SECONDS)	HEATING RATE (FAHRENHEIT BASE) (BTU/FT2 SEC)	HEATING RATE (RANKINE BASE) (BTU/FT2 SEC)
0.	0.00	0.00
10.	0.11	1.98
20.	0.37	3.37
30.	0.48	3.24
40.	0.55	2.96
50.	0.62	2.79
60.	0.66	2.27
70.	0.89	2.31
80.	0.86	1.75
90.	0.88	1.52
100.	1.05	1.54
110.	1.26	1.68
120.	1.32	1.65
130.	0.93	1.10
140.	1.18	1.35
150.	1.55	1.72
160.	1.27	1.41
170.	1.20	1.34
180.	1.14	1.27
190.	0.74	0.83
200.	0.99	1.12
210.	0.68	0.77
220.	0.66	0.75
230.	0.64	0.73
240.	0.60	0.69
250.	0.56	0.65
260.	0.52	0.61
270.	0.49	0.58
280.	0.46	0.55
290.	0.42	0.51
300.	0.39	0.48
310.	0.35	0.44
320.	0.32	0.41
330.	0.28	0.37
340.	0.25	0.35
350.	0.21	0.31
360.	0.18	0.28
370.	0.14	0.22
380.	0.10	0.18
390.	0.05	0.09
400.	0.00	0.00

TABLE II-6 (CONT.)
X-15A-2 MAXIMUM VELOCITY FLIGHT

WING
AERODYNAMIC HEATING PROFILES

THERMOCOUPLE LOCATION 13065   TOTAL HEAT   479.   BTU/FT2

TRAJECTORY TIME (SECONDS)	HEATING RATE (FAHRENHEIT BASE) (BTU/FT2 SEC)	HEATING RATE (RANKINE BASE) (BTU/FT2 SEC)
0.	0.00	0.00
10.	0.09	1.62
20.	0.30	2.73
30.	0.39	2.63
40.	0.44	2.37
50.	0.50	2.25
60.	0.52	1.78
70.	0.71	1.84
80.	0.66	1.34
90.	0.66	1.14
100.	0.76	1.12
110.	0.89	1.18
120.	0.89	1.11
130.	0.57	0.67
140.	0.71	0.81
150.	0.89	0.99
160.	0.72	0.80
170.	0.69	0.77
180.	0.66	0.73
190.	0.62	0.69
200.	0.58	0.65
210.	0.49	0.55
220.	0.41	0.46
230.	0.48	0.55
240.	0.55	0.63
250.	0.53	0.61
260.	0.51	0.59
270.	0.59	0.69
280.	0.67	0.80
290.	0.72	0.87
300.	0.78	0.96
310.	0.73	0.92
320.	0.68	0.88
330.	0.72	0.96
340.	0.78	1.09
350.	0.88	1.31
360.	0.99	1.54
370.	1.05	1.72
380.	1.12	2.02
390.	1.12	2.18
400.	1.12	2.40

TABLE II-6(CONT.)
X-15A-2 MAXIMUM VELOCITY FLIGHT

WING
AERODYNAMIC HEATING PROFILES

THERMOCOUPLE LOCATION 13075 TOTAL HEAT 2657. BTU/FT2

TRAJECTORY TIME (SECONDS)	HEATING RATE (FAHRENHEIT BASE) (BTU/FT2 SEC)	HEATING RATE (RANKINE BASE) (BTU/FT2 SEC)
0.	0.00	0.00
10.	0.25	4.51
20.	0.50	4.56
30.	0.75	5.07
40.	1.00	5.39
50.	1.24	5.59
60.	1.30	4.47
70.	1.26	3.28
80.	1.54	3.14
90.	1.88	3.25
100.	2.19	3.23
110.	2.46	3.28
120.	3.28	4.11
130.	6.87	8.14
140.	8.31	9.52
150.	8.76	9.76
160.	9.14	10.18
170.	8.36	9.34
180.	7.77	8.70
190.	9.40	10.58
200.	7.55	8.54
210.	9.65	10.96
220.	9.20	10.53
230.	8.21	9.44
240.	7.38	8.56
250.	7.46	8.70
260.	7.92	9.31
270.	7.66	9.08
280.	6.25	7.50
290.	5.46	6.64
300.	5.32	6.57
310.	5.47	6.94
320.	5.58	7.28
330.	5.27	7.09
340.	4.42	6.22
350.	3.45	5.14
360.	3.15	4.90
370.	2.71	4.44
380.	2.46	4.43
390.	2.39	4.66
400.	2.27	4.88

TABLE II-6 (CONT.)
X-15A-2 MAXIMUM VELOCITY FLIGHT

WING
AERODYNAMIC HEATING PROFILES

THERMOCOUPLE LOCATION 13079 TOTAL HEAT 1887. BTU/FT2

TRAJECTORY TIME (SECONDS)	HEATING RATE (FAHRENHEIT BASE) (BTU/FT2 SEC)	HEATING RATE (RANKINE BASE) (BTU/FT2 SEC)
0.	0.00	0.00
10.	0.20	3.60
20.	0.40	3.64
30.	0.60	4.05
40.	0.80	4.31
50.	1.00	4.51
60.	1.03	3.54
70.	0.97	2.52
80.	1.17	2.39
90.	1.41	2.44
100.	1.58	2.33
110.	1.73	2.31
120.	2.26	2.83
130.	4.79	5.67
140.	5.65	6.47
150.	5.73	6.38
160.	6.04	6.73
170.	5.53	6.18
180.	5.16	5.78
190.	6.43	7.24
200.	5.09	5.76
210.	6.68	7.59
220.	6.40	7.33
230.	5.68	6.53
240.	5.09	5.90
250.	5.16	6.02
260.	5.54	6.51
270.	5.37	6.36
280.	4.35	5.22
290.	3.79	4.61
300.	3.72	4.59
310.	3.89	4.94
320.	4.02	5.24
330.	3.83	5.15
340.	3.23	4.55
350.	2.53	3.77
360.	2.32	3.61
370.	2.00	3.28
380.	1.85	3.33
390.	1.81	3.53
400.	1.74	3.74

TABLE II-6(CONT.)
X-15A-2 MAXIMUM VELOCITY FLIGHT

WING
AERODYNAMIC HEATING PROFILES

THERMOCOUPLE LOCATION 13084 TOTAL HEAT 1373. BTU/FT2

TRAJECTORY TIME (SECONDS)	HEATING RATE (FAHRENHEIT BASE) (BTU/FT2 SEC)	HEATING RATE (RANKINE BASE) (BTU/FT2 SEC)
0.	0.00	0.00
10.	0.17	3.06
20.	0.32	2.91
30.	0.49	3.31
40.	0.65	3.50
50.	0.83	3.74
60.	0.85	2.92
70.	0.78	2.03
80.	0.92	1.88
90.	1.08	1.87
100.	1.18	1.74
110.	1.24	1.65
120.	1.59	1.99
130.	3.40	4.03
140.	3.90	4.46
150.	3.77	4.20
160.	4.03	4.49
170.	3.70	4.13
180.	3.46	3.87
190.	4.47	5.03
200.	3.48	3.93
210.	4.72	5.36
220.	4.54	5.20
230.	4.00	4.60
240.	3.57	4.14
250.	3.63	4.23
260.	3.95	4.64
270.	3.85	4.56
280.	3.08	3.69
290.	2.68	3.26
300.	2.66	3.28
310.	2.82	3.58
320.	2.96	3.86
330.	2.85	3.83
340.	2.42	3.41
350.	1.90	2.83
360.	1.75	2.72
370.	1.51	2.47
380.	1.42	2.56
390.	1.41	2.75
400.	1.37	2.94

TABLE II-6 (CONT.)
X-15A-2 MAXIMUM VELOCITY FLIGHT

WING
AERODYNAMIC HEATING PROFILES

THERMOCOUPLE LOCATION 13095 TOTAL HEAT 1477. BTU/FT2

TRAJECTORY TIME (SECONDS)	HEATING RATE (FAHRENHEIT BASE) (BTU/FT2 SEC)	HEATING RATE (RANKINE BASE) (BTU/FT2 SEC)
0.	0.00	0.00
10.	0.19	3.42
20.	0.63	5.74
30.	0.82	5.54
40.	0.94	5.07
50.	1.06	4.78
60.	1.15	3.95
70.	1.58	4.11
80.	1.61	3.29
90.	1.73	2.99
100.	2.16	3.18
110.	2.71	3.62
120.	3.02	3.78
130.	2.42	2.86
140.	3.16	3.62
150.	4.42	4.92
160.	3.72	4.14
170.	3.51	3.92
180.	3.30	3.69
190.	3.54	3.98
200.	2.78	3.14
210.	2.41	2.73
220.	2.05	2.34
230.	2.27	2.61
240.	2.50	2.90
250.	2.39	2.78
260.	2.28	2.68
270.	2.48	2.94
280.	2.69	3.22
290.	2.78	3.38
300.	2.88	3.56
310.	2.62	3.32
320.	2.38	3.10
330.	2.40	3.23
340.	2.42	3.41
350.	2.57	3.83
360.	2.73	4.25
370.	2.75	4.51
380.	2.77	4.99
390.	2.67	5.21
400.	2.58	5.55

TABLE II-6(CONT.)
X-15A-2 MAXIMUM VELOCITY FLIGHT

WING
AERODYNAMIC HEATING PROFILES

THERMOCOUPLE LOCATION 13100 TOTAL HEAT 787. BTU/FT2

TRAJECTORY TIME (SECONDS)	HEATING RATE (FAHRENHEIT BASE) (BTU/FT2 SEC)	HEATING RATE (RANKINE BASE) (BTU/FT2 SEC)
0.	0.00	0.00
10.	0.12	2.16
20.	0.42	3.83
30.	0.54	3.65
40.	0.62	3.34
50.	0.70	3.15
60.	0.75	2.58
70.	1.02	2.65
80.	0.99	2.02
90.	1.02	1.76
100.	1.22	1.79
110.	1.47	1.96
120.	1.55	1.94
130.	1.11	1.31
140.	1.41	1.61
150.	1.86	2.07
160.	1.53	1.70
170.	1.45	1.62
180.	1.38	1.54
190.	1.28	1.44
200.	1.19	1.34
210.	1.03	1.17
220.	0.87	0.99
230.	0.99	1.13
240.	1.11	1.28
250.	1.06	1.23
260.	1.02	1.19
270.	1.14	1.35
280.	1.26	1.51
290.	1.33	1.61
300.	1.41	1.74
310.	1.30	1.65
320.	1.20	1.56
330.	1.25	1.68
340.	1.30	1.83
350.	1.43	2.13
360.	1.57	2.44
370.	1.62	2.65
380.	1.68	3.03
390.	1.65	3.22
400.	1.63	3.50

TABLE II-6 (CONT.)
X-15A-2 MAXIMUM VELOCITY FLIGHT

WING
AERODYNAMIC HEATING PROFILES

THERMOCOUPLE LOCATION 13106 TOTAL HEAT 551. BTU/FT2

TRAJECTORY TIME (SECONDS)	HEATING RATE (FAHRENHEIT BASE) (BTU/FT2 SEC)	HEATING RATE (RANKINE BASE) (BTU/FT2 SEC)
0.	0.00	0.00
10.	0.10	1.80
20.	0.34	3.10
30.	0.44	2.97
40.	0.49	2.64
50.	0.56	2.52
60.	0.59	2.02
70.	0.80	2.08
80.	0.76	1.55
90.	0.75	1.30
100.	0.87	1.28
110.	1.02	1.36
120.	1.04	1.30
130.	0.67	0.79
140.	0.84	0.96
150.	1.06	1.18
160.	0.86	0.95
170.	0.82	0.91
180.	0.78	0.87
190.	0.73	0.82
200.	0.69	0.78
210.	0.59	0.67
220.	0.49	0.56
230.	0.57	0.65
240.	0.66	0.76
250.	0.63	0.73
260.	0.61	0.71
270.	0.70	0.83
280.	0.79	0.94
290.	0.85	1.03
300.	0.91	1.12
310.	0.85	1.07
320.	0.79	1.03
330.	0.84	1.13
340.	0.89	1.25
350.	1.01	1.50
360.	1.14	1.77
370.	1.20	1.96
380.	1.27	2.29
390.	1.26	2.46
400.	1.26	2.71

TABLE II-6 (CONT.)
X-15A-2 MAXIMUM VELOCITY FLIGHT

WING
AERODYNAMIC HEATING PROFILES

THERMOCOUPLE LOCATION 13110 TOTAL HEAT 3820. BTU/FT2

TRAJECTORY TIME (SECONDS)	HEATING RATE (FAHRENHEIT BASE) (BTU/FT2 SEC)	HEATING RATE (RANKINE BASE) (BTU/FT2 SEC)
0.	0.00	0.00
10.	0.33	5.95
20.	0.66	6.02
30.	0.98	6.62
40.	1.30	7.01
50.	1.63	7.35
60.	1.73	5.95
70.	1.71	4.45
80.	2.12	4.33
90.	2.62	4.54
100.	3.12	4.60
110.	3.58	4.78
120.	4.83	6.05
130.	10.00	11.85
140.	12.29	14.08
150.	13.27	14.79
160.	13.77	15.34
170.	12.59	14.07
180.	11.71	13.12
190.	13.89	15.64
200.	11.27	12.75
210.	14.12	16.04
220.	13.43	15.38
230.	12.03	13.83
240.	10.83	12.57
250.	10.92	12.74
260.	11.50	13.52
270.	11.09	13.15
280.	9.10	10.92
290.	7.96	9.68
300.	7.72	9.54
310.	7.84	9.95
320.	7.91	10.32
330.	7.44	10.02
340.	6.21	8.75
350.	4.84	7.21
360.	4.41	6.87
370.	3.78	6.20
380.	3.40	6.13
390.	3.27	6.38
400.	3.09	6.64

TABLE II-6 (CONT.)
X-15A-2 MAXIMUM VELOCITY FLIGHT

WING
AERODYNAMIC HEATING PROFILES

THERMOCOUPLE LOCATION 13115 TOTAL HEAT 2179. BTU/FT2

TRAJECTORY TIME (SECONDS)	HEATING RATE (FAHRENHEIT BASE) (BTU/FT2 SEC)	HEATING RATE (RANKINE BASE) (BTU/FT2 SEC)
0.	0.00	0.00
10.	0.23	4.14
20.	0.46	4.19
30.	0.69	4.66
40.	0.90	4.85
50.	1.13	5.09
60.	1.17	4.02
70.	1.11	2.89
80.	1.34	2.74
90.	1.61	2.79
100.	1.83	2.69
110.	2.01	2.68
120.	2.63	3.29
130.	5.54	6.56
140.	6.56	7.51
150.	6.69	7.45
160.	7.04	7.84
170.	6.46	7.21
180.	6.02	6.74
190.	7.47	8.41
200.	5.93	6.71
210.	7.75	8.80
220.	7.42	8.49
230.	6.59	7.58
240.	5.91	6.86
250.	5.98	6.97
260.	6.41	7.53
270.	6.21	7.36
280.	5.03	6.03
290.	4.39	5.34
300.	4.31	5.32
310.	4.48	5.69
320.	4.62	6.03
330.	4.40	5.92
340.	3.70	5.21
350.	2.89	4.31
360.	2.66	4.14
370.	2.29	3.75
380.	2.11	3.80
390.	2.06	4.02
400.	1.98	4.26

TABLE II-6(CONT.)
X-15A-2 MAXIMUM VELOCITY FLIGHT

WING
AERODYNAMIC HEATING PROFILES

THERMOCOUPLE LOCATION 13121 TOTAL HEAT 1574. BTU/FT2

TRAJECTORY TIME (SECONDS)	HEATING RATE (FAHRENHEIT BASE) (BTU/FT2 SEC)	HEATING RATE (RANKINE BASE) (BTU/FT2 SEC)
0.	0.00	0.00
10.	0.19	3.42
20.	0.38	3.46
30.	0.57	3.85
40.	0.75	4.04
50.	0.93	4.19
60.	0.95	3.26
70.	0.88	2.29
80.	1.04	2.12
90.	1.23	2.13
100.	1.35	1.99
110.	1.43	1.91
120.	1.84	2.30
130.	3.90	4.62
140.	4.48	5.13
150.	4.37	4.87
160.	4.66	5.19
170.	4.28	4.78
180.	4.00	4.48
190.	5.15	5.80
200.	4.02	4.55
210.	5.42	6.15
220.	5.21	5.96
230.	4.60	5.29
240.	4.11	4.77
250.	4.17	4.86
260.	4.53	5.32
270.	4.41	5.22
280.	3.53	4.23
290.	3.08	3.74
300.	3.04	3.75
310.	3.23	4.10
320.	3.38	4.41
330.	3.24	4.36
340.	2.75	3.87
350.	2.16	3.22
360.	1.99	3.10
370.	1.72	2.82
380.	1.61	2.90
390.	1.60	3.12
400.	1.55	3.33

TABLE II-7
X-15A-2 MAXIMUM VELOCITY FLIGHT

HORIZONTAL STABILIZER
AERODYNAMIC HEATING PROFILES

THERMOCOUPLE LOCATION 15017 TOTAL HEAT 14780. BTU/FT2

TRAJECTORY TIME (SECONDS)	HEATING RATE (FAHRENHEIT BASE) (BTU/FT2 SEC)	HEATING RATE (RANKINE BASE) (BTU/FT2 SEC)
0.	0.00	0.00
10.	0.53	9.56
20.	1.06	9.67
30.	1.59	10.75
40.	1.97	10.63
50.	2.08	9.38
60.	2.62	9.01
70.	3.66	9.53
80.	5.30	10.83
90.	7.49	12.98
100.	11.61	17.12
110.	16.99	22.71
120.	24.64	30.90
130.	40.42	47.92
140.	57.14	65.49
150.	79.03	88.09
160.	76.54	85.30
170.	70.67	78.98
180.	65.99	73.96
190.	62.34	70.21
200.	57.55	65.15
210.	57.58	65.43
220.	53.38	61.14
230.	50.49	58.08
240.	46.91	54.45
250.	46.06	53.74
260.	44.17	51.94
270.	41.58	49.31
280.	37.58	45.11
290.	33.99	41.37
300.	31.45	38.88
310.	27.80	35.31
320.	24.86	32.45
330.	21.89	29.48
340.	17.99	25.35
350.	14.41	21.49
360.	12.79	19.93
370.	11.20	18.37
380.	8.86	15.98
390.	7.65	14.94
400.	6.46	13.89

TABLE II-7 (CONT.)
X-15A-2 MAXIMUM VELOCITY FLIGHT

HORIZONTAL STABILIZER
AERODYNAMIC HEATING PROFILES

THERMOCOUPLE LOCATION 15025 TOTAL HEAT 1915. BTU/FT2

TRAJECTORY TIME (SECONDS)	HEATING RATE (FAHRENHEIT BASE) (BTU/FT2 SEC)	HEATING RATE (RANKINE BASE) (BTU/FT2 SEC)
0.	0.00	0.00
10.	0.39	7.03
20.	0.78	7.11
30.	1.02	6.89
40.	1.18	6.37
50.	1.11	5.00
60.	1.18	4.05
70.	1.34	3.48
80.	1.49	3.04
90.	1.70	2.94
100.	2.04	3.00
110.	2.41	3.22
120.	2.93	3.67
130.	3.97	4.70
140.	4.89	5.60
150.	5.86	6.53
160.	5.57	6.20
170.	5.15	5.75
180.	4.83	5.41
190.	4.61	5.19
200.	4.40	4.98
210.	4.48	5.09
220.	4.35	4.98
230.	4.21	4.84
240.	4.14	4.80
250.	4.21	4.91
260.	4.20	4.93
270.	4.11	4.87
280.	3.94	4.73
290.	3.77	4.58
300.	3.73	4.61
310.	3.65	4.63
320.	3.55	4.63
330.	3.44	4.63
340.	3.15	4.43
350.	2.83	4.22
360.	2.77	4.31
370.	2.69	4.41
380.	2.47	4.45
390.	2.41	4.70
400.	2.30	4.94

TABLE II-7 (CONT.)
X-15A-2 MAXIMUM VELOCITY FLIGHT

HORIZONTAL STABILIZER
AERODYNAMIC HEATING PROFILES

THERMOCOUPLE LOCATION 15031 TOTAL HEAT 929. BTU/FT2

TRAJECTORY TIME (SECONDS)	HEATING RATE (FAHRENHEIT BASE) (BTU/FT2 SEC)	HEATING RATE (RANKINE BASE) (BTU/FT2 SEC)
0.	0.00	0.00
10.	0.25	4.51
20.	0.51	4.65
30.	0.66	4.46
40.	0.76	4.10
50.	0.71	3.20
60.	0.73	2.51
70.	0.80	2.08
80.	0.85	1.73
90.	0.93	1.61
100.	1.04	1.53
110.	1.16	1.55
120.	1.33	1.66
130.	1.68	1.99
140.	1.96	2.24
150.	2.15	2.39
160.	2.05	2.28
170.	1.91	2.13
180.	1.80	2.01
190.	1.75	1.97
200.	1.71	1.93
210.	1.77	2.01
220.	1.76	2.01
230.	1.73	1.99
240.	1.72	1.99
250.	1.74	2.03
260.	1.76	2.06
270.	1.72	2.03
280.	1.69	2.02
290.	1.67	2.03
300.	1.66	2.05
310.	1.66	2.10
320.	1.67	2.17
330.	1.61	2.16
340.	1.56	2.19
350.	1.51	2.25
360.	1.46	2.27
370.	1.42	2.32
380.	1.38	2.48
390.	1.36	2.65
400.	1.35	2.90

TABLE II-8
X-15A-2 MAXIMUM VELOCITY FLIGHT

VERTICAL TAIL
AERODYNAMIC HEATING PROFILES

THERMOCOUPLE LOCATION 16025   TOTAL HEAT 1970. BTU/FT2

TRAJECTORY TIME (SECONDS)	HEATING RATE (FAHRENHEIT BASE) (BTU/FT2 SEC)	HEATING RATE (RANKINE BASE) (BTU/FT2 SEC)
0.	0.00	0.00
10.	0.36	6.49
20.	0.72	6.56
30.	0.94	6.35
40.	1.09	5.88
50.	1.03	4.64
60.	1.10	3.78
70.	1.26	3.28
80.	1.43	2.92
90.	1.65	2.86
100.	2.02	2.98
110.	2.43	3.24
120.	3.03	3.80
130.	4.25	5.03
140.	5.38	6.16
150.	6.63	7.39
160.	6.29	7.01
170.	5.83	6.51
180.	5.38	6.03
190.	5.10	5.74
200.	4.84	5.47
210.	4.79	5.44
220.	4.75	5.44
230.	4.61	5.30
240.	4.48	5.20
250.	4.50	5.25
260.	4.52	5.31
270.	4.35	5.15
280.	4.19	5.03
290.	4.05	4.93
300.	3.91	4.83
310.	3.79	4.81
320.	3.67	4.79
330.	3.43	4.62
340.	3.19	4.49
350.	2.97	4.43
360.	2.76	4.30
370.	2.58	4.23
380.	2.40	4.32
390.	2.30	4.49
400.	2.21	4.75

TABLE II-8 (CONT.)

X-15A-2 MAXIMUM VELOCITY FLIGHT

VERTICAL TAIL

AERODYNAMIC HEATING PROFILES

THERMOCOUPLE LOCATION 16029 TOTAL HEAT 1670. BTU/FT2

TRAJECTORY TIME (SECONDS)	HEATING RATE (FAHRENHEIT BASE) (BTU/FT2 SEC)	HEATING RATE (RANKINE BASE) (BTU/FT2 SEC)
0.	0.00	0.00
10.	0.31	5.59
20.	0.63	5.74
30.	0.82	5.54
40.	0.95	5.12
50.	0.89	4.01
60.	0.95	3.26
70.	1.08	2.81
80.	1.22	2.49
90.	1.41	2.44
100.	1.71	2.52
110.	2.05	2.74
120.	2.55	3.19
130.	3.57	4.23
140.	4.51	5.16
150.	5.54	6.17
160.	5.25	5.85
170.	4.81	5.37
180.	4.48	5.02
190.	4.26	4.79
200.	4.04	4.57
210.	4.12	4.68
220.	3.97	4.54
230.	3.83	4.40
240.	3.75	4.35
250.	3.81	4.44
260.	3.79	4.45
270.	3.70	4.38
280.	3.53	4.23
290.	3.35	4.07
300.	3.30	4.08
310.	3.21	4.07
320.	3.11	4.05
330.	2.99	4.02
340.	2.71	3.81
350.	2.41	3.59
360.	2.35	3.66
370.	2.27	3.72
380.	2.06	3.71
390.	2.00	3.90
400.	1.90	4.08

TABLE II-8 (CONT.)
X-15A-2 MAXIMUM VELOCITY FLIGHT

VERTICAL TAIL
AERODYNAMIC HEATING PROFILES

THERMOCOUPLE LOCATION 16033 TOTAL HEAT 1536. BTU/FT2

TRAJECTORY TIME (SECONDS)	HEATING RATE (FAHRENHEIT BASE) (BTU/FT2 SEC)	HEATING RATE (RANKINE BASE) (BTU/FT2 SEC)
0.	0.00	0.00
10.	0.29	5.23
20.	0.58	5.29
30.	0.76	5.14
40.	0.89	4.80
50.	0.83	3.74
60.	0.88	3.02
70.	1.00	2.60
80.	1.13	2.31
90.	1.30	2.25
100.	1.57	2.31
110.	1.88	2.51
120.	2.34	2.93
130.	3.27	3.87
140.	4.13	4.73
150.	5.07	5.65
160.	4.80	5.34
170.	4.39	4.90
180.	4.10	4.59
190.	3.89	4.38
200.	3.69	4.17
210.	3.76	4.27
220.	3.63	4.15
230.	3.50	4.02
240.	3.43	3.98
250.	3.49	4.07
260.	3.47	4.08
270.	3.39	4.02
280.	3.23	3.87
290.	3.07	3.73
300.	3.03	3.74
310.	2.95	3.74
320.	2.86	3.73
330.	2.75	3.70
340.	2.50	3.52
350.	2.23	3.32
360.	2.17	3.38
370.	2.10	3.44
380.	1.91	3.44
390.	1.85	3.61
400.	1.76	3.78

TABLE II-8 (CONT.)
X-15A-2 MAXIMUM VELOCITY FLIGHT

VERTICAL TAIL
AERODYNAMIC HEATING PROFILES

THERMOCOUPLE LOCATION 17001 TOTAL HEAT 13362. BTU/FT2

TRAJECTORY TIME (SECONDS)	HEATING RATE (FAHRENHEIT BASE) (BTU/FT2 SEC)	HEATING RATE (RANKINE BASE) (BTU/FT2 SEC)
0.	0.00	0.00
10.	0.35	6.31
20.	1.05	9.58
30.	1.41	9.53
40.	1.74	9.39
50.	1.88	8.48
60.	2.39	8.22
70.	3.37	8.77
80.	4.88	9.97
90.	6.87	11.90
100.	10.65	15.71
110.	15.62	20.88
120.	22.59	28.33
130.	36.47	43.24
140.	51.72	59.27
150.	71.93	80.17
160.	69.44	77.39
170.	64.12	71.66
180.	59.87	67.10
190.	55.87	62.92
200.	52.06	58.93
210.	51.37	58.37
220.	47.64	54.56
230.	45.29	52.09
240.	42.29	49.09
250.	41.54	48.46
260.	39.66	46.63
270.	37.34	44.28
280.	34.07	40.90
290.	30.94	37.66
300.	28.63	35.39
310.	25.23	32.05
320.	22.48	29.34
330.	19.92	26.69
340.	16.35	23.04
350.	13.19	19.67
360.	11.73	18.28
370.	10.30	16.89
380.	8.16	14.72
390.	7.04	13.75
400.	5.95	12.80

TABLE II-8 (CONT.)

X-15A-2 MAXIMUM VELOCITY FLIGHT

VERTICAL TAIL

AERODYNAMIC HEATING PROFILES

THERMOCOUPLE LOCATION 17006 TOTAL HEAT 2009. BTU/FT2

TRAJECTORY TIME (SECONDS)	HEATING RATE (FAHRENHEIT BASE) (BTU/FT2 SEC)	HEATING RATE (RANKINE BASE) (BTU/FT2 SEC)
0.	0.00	0.00
10.	0.36	6.49
20.	0.73	6.66
30.	0.96	6.49
40.	1.11	5.99
50.	1.05	4.73
60.	1.12	3.85
70.	1.28	3.33
80.	1.45	2.96
90.	1.68	2.91
100.	2.06	3.03
110.	2.48	3.31
120.	3.09	3.87
130.	4.34	5.14
140.	5.49	6.29
150.	6.77	7.54
160.	6.42	7.15
170.	5.89	6.58
180.	5.50	6.16
190.	5.21	5.86
200.	4.95	5.60
210.	5.03	5.71
220.	4.85	5.55
230.	4.68	5.38
240.	4.57	5.30
250.	4.64	5.41
260.	4.61	5.42
270.	4.49	5.32
280.	4.28	5.13
290.	4.06	4.94
300.	3.99	4.93
310.	3.87	4.91
320.	3.74	4.88
330.	3.59	4.83
340.	3.25	4.58
350.	2.88	4.29
360.	2.81	4.37
370.	2.70	4.42
380.	2.45	4.42
390.	2.37	4.62
400.	2.25	4.84

TABLE II-8 (CONT.)
X-15A-2 MAXIMUM VELOCITY FLIGHT

VERTICAL TAIL
AERODYNAMIC HEATING PROFILES

THERMOCOUPLE LOCATION 17010   TOTAL HEAT 1674. BTU/FT2

TRAJECTORY TIME (SECONDS)	HEATING RATE (FAHRENHEIT BASE) (BTU/FT2 SEC)	HEATING RATE (RANKINE BASE) (BTU/FT2 SEC)
0.	0.00	0.00
10.	0.31	5.59
20.	0.63	5.74
30.	0.82	5.54
40.	0.95	5.12
50.	0.90	4.06
60.	0.95	3.26
70.	1.09	2.83
80.	1.22	2.49
90.	1.41	2.44
100.	1.71	2.52
110.	2.06	2.75
120.	2.55	3.19
130.	3.58	4.24
140.	4.52	5.18
150.	5.56	6.19
160.	5.26	5.86
170.	4.82	5.38
180.	4.50	5.04
190.	4.27	4.80
200.	4.05	4.58
210.	4.13	4.69
220.	3.98	4.55
230.	3.84	4.41
240.	3.76	4.36
250.	3.82	4.45
260.	3.80	4.46
270.	3.71	4.39
280.	3.54	4.24
290.	3.36	4.09
300.	3.31	4.09
310.	3.22	4.09
320.	3.12	4.07
330.	3.00	4.04
340.	2.72	3.83
350.	2.42	3.60
360.	2.36	3.67
370.	2.27	3.72
380.	2.07	3.73
390.	2.00	3.90
400.	1.91	4.10

TABLE II-8 (CONT.)

X-15A-2 MAXIMUM VELOCITY FLIGHT

VERTICAL TAIL

AERODYNAMIC HEATING PROFILES

THERMOCOUPLE LOCATION 17018 TOTAL HEAT 5906. BTU/FT2

TRAJECTORY TIME (SECONDS)	HEATING RATE (FAHRENHEIT BASE) (BTU/FT2 SEC)	HEATING RATE (RANKINE BASE) (BTU/FT2 SEC)
0.	0.10	0.10
10.	0.20	3.60
20.	0.50	4.56
30.	0.70	4.73
40.	0.60	3.23
50.	0.60	2.70
60.	0.60	2.06
70.	0.70	1.82
80.	0.80	1.63
90.	1.00	1.73
100.	1.20	1.77
110.	1.60	2.13
120.	2.20	2.75
130.	3.10	3.67
140.	4.80	5.50
150.	62.70	69.88
160.	59.20	65.98
170.	53.40	59.67
180.	51.90	58.17
190.	56.40	63.52
200.	48.10	54.45
210.	37.70	42.84
220.	28.30	32.41
230.	19.30	22.20
240.	12.00	13.92
250.	4.20	4.90
260.	4.00	4.70
270.	3.90	4.62
280.	3.70	4.44
290.	3.50	4.26
300.	3.30	4.08
310.	3.20	4.06
320.	3.10	4.04
330.	2.90	3.90
340.	2.80	3.94
350.	2.70	4.02
360.	2.50	3.89
370.	2.40	3.93
380.	2.30	4.14
390.	2.20	4.29
400.	2.10	4.51

TABLE II-9
VANE ANTENNA HEATING DATA
X-15 MACH 8 MISSION

DATA POINT TRAJ TIME (SEC)	STAGNATION $\dot{Q}_F$	STAGNATION $\dot{Q}_R$	BOTTOM $\dot{Q}_F$	BOTTOM $\dot{Q}_R$
0	.30	.30	.05	.05
20	2.06	18.849	1.08	9.882
40	3.46	17.681	1.65	8.431
60	4.44	16.916	1.27	4.839
80	9.94	18.787	1.72	3.251
100	24.23	33.670	2.59	3.600
120	62.00	76.880	6.24	7.738
140	144.03	161.314	9.16	10.259
150	214.40	233.696	11.20	12.208
160	205.28	223.755	12.66	13.799
170	190.87	209.957	12.05	13.255
180	180.19	200.011	11.61	12.887
200	158.66	176.113	10.96	12.166
220	138.94	155.613	10.31	11.547
240	122.10	137.973	9.60	10.848
260	106.67	121.604	8.91	10.157
280	93.59	107.628	8.36	9.614
300	82.08	96.034	7.74	9.056
320	73.59	86.836	7.35	8.673
340	63.83	75.958	6.84	8.139
360	56.00	67.760	6.34	7.671
380	48.54	59.704	5.87	7.220
400	42.33	52.912	5.44	6.800
420	35.43	45.350	4.86	6.221
440	30.22	39.890	4.40	5.808
460	26.65	35.977	4.04	5.454
480	23.75	33.012	3.77	5.240
500	21.07	30.341	3.45	4.968
520	18.54	27.810	3.16	4.740
550	15.08	24.429	2.74	4.439
TOTAL HEAT	43250 BTU/FT^2		4200 BTU/FT^2	

TABLE II-10
X-15A-2 MAXIMUM VELOCITY FLIGHT

MODIFIED VENTRAL FIN
AERODYNAMIC HEATING PROFILES

THERMOCOUPLE LOCATION 17001 TOTAL HEAT

To be added when fin design is finalized.

TABLE II-10 (CONT.)

X-15A-2 MAXIMUM VELOCITY FLIGHT

MODIFIED VENTRAL FIN
AERODYNAMIC HEATING PROFILES

THERMOCOUPLE LOCATION 17006 TOTAL HEAT 4018 BTU/FT2

TRAJECTORY TIME (SECONDS)	HEATING RATE (FAHRENHEIT BASE) (BTU/FT2 SEC)	HEATING RATE (RANKINE BASE) (BTU/FT2 SEC)
0.	0.00	0.00
10.	0.72	12.98
20.	1.46	13.32
30.	1.92	12.98
40.	2.22	11.98
50.	2.10	9.46
60.	2.24	7.70
70.	2.56	6.66
80.	2.90	5.92
90.	3.36	5.82
100.	4.12	6.06
110.	4.96	6.62
120.	6.18	7.74
130.	8.68	10.28
140.	10.98	12.58
150.	13.54	15.08
160.	12.84	14.30
170.	11.78	13.16
180.	11.00	12.32
190.	10.42	11.72
200.	9.80	11.20
210.	10.06	11.42
220.	9.70	11.10
230.	9.36	10.76
240.	9.14	10.60
250.	9.28	10.82
260.	9.22	10.84
270.	8.98	10.64
280.	8.56	10.26
290.	8.12	9.88
300.	7.98	9.86
310.	7.74	9.82
320.	7.48	9.76
330.	7.18	9.66
340.	6.50	9.16
350.	5.76	8.58
360.	5.62	8.72
370.	5.40	8.84
380.	4.90	8.84
390.	4.74	9.24
400.	4.50	9.68

TABLE II-10 (CONT.)

X-15A-2 MAXIMUM VELOCITY FLIGHT .

MODIFIED VENTRAL FIN
AERODYNAMIC HEATING PROFILES

THERMOCOUPLE LOCATION 17010

TOTAL HEAT 3348 BTU/FT2

TRAJECTORY TIME (SECONDS)	HEATING RATE (FAHRENEHIT BASE) (BTU/FT2 SEC)	HEATING RATE (RANKINE BASE) (BTU/FT2 SEC)
0.	0.00	0.00
10.	0.62	11.18
20.	1.26	11.48
30.	1.64	11.08
40.	1.90	10.24
50.	1.80	8.12
60.	1.90	6.52
70.	2.18	5.66
80.	2.44	4.98
90.	2.82	4.88
100.	3.42	5.04
110.	4.12	5.50
120.	5.10	6.39
130.	7.16	8.48
140.	9.04	10.36
150.	11.12	12.38
160.	10.52	11.72
170.	9.64	10.76
180.	9.00	10.08
190.	8.54	9.60
200.	8.10	9.16
210.	8.26	9.38
220.	7.96	9.10
230.	7.68	8.82
240.	7.52	8.72
250.	7.64	8.90
260.	7.60	8.92
270.	7.42	8.78
280.	7.08	8.48
290.	6.72	8.18
300.	6.62	8.18
310.	6.44	8.18
320.	6.24	8.14
330.	6.00	8.08
340.	5.44	7.66
350.	4.84	7.20
360.	4.72	7.34
370.	4.54	7.44
380.	4.14	7.46
390.	4.00	7.80
400.	3.82	8.20

TABLE II-10 (CONT.)

X-15A-2 MAXIMUM VELOCITY FLIGHT

MODIFIED VENTRAL FIN
AERODYNAMIC HEATING PROFILES

THERMOCOUPLE LOCATION 17018

TOTAL HEAT 11812 BTU/FT2

TRAJECTORY TIME (SECONDS)	HEATING RATE (FAHRENHEIT BASE) (BTU/FT2 SEC)	HEATING RATE (RANKINE BASE) (BTU/FT2 SEC)
0.	0.20	0.20
10.	0.40	7.20
20.	1.00	9.12
30.	1.40	9.46
40.	1.20	6.46
50.	1.20	5.40
60.	1.20	4.12
70.	1.40	3.64
80.	1.60	3.26
90.	2.00	3.46
100.	2.40	3.54
110.	3.20	4.26
120.	4.40	5.50
130.	6.20	7.34
140.	9.60	11.00
150.	125.40	139.76
160.	118.40	131.96
170.	106.80	119.34
180.	103.80	116.34
190.	112.80	127.04
200.	96.20	108.90
210.	75.40	85.68
220.	56.60	64.82
230.	38.60	44.40
240.	24.00	27.84
250.	8.40	9.80
260.	8.00	9.40
270.	7.80	9.24
280.	7.40	8.88
290.	7.00	8.52
300.	6.60	8.16
310.	6.40	8.12
320.	6.20	8.08
330.	5.80	7.80
340	5.60	7.88
350.	5.40	8.04
360.	5.00	7.78
370.	4.80	7.86
380.	4.60	8.28
390.	4.40	8.58
400.	4.20	9.02

III. SYSTEM DESIGN

The range of environmental exposure to be satisfied by the ablation system exceeds the efficient usage limitations of any one ablator material. A combination of materials is required in designing the protection system to avoid "over designing" some areas and/or tolerating "weak-links" elsewhere. Multiple material use permits some lattitude to "custom tailor" the individual material properties to the environmental requirements and thereby increase the efficiency and effectiveness of the overall installation. This report section defines the design evolution of the thermal protection system for the X-15-2.

A. Material Selection

Following is a brief description of the material screening phase of the thermal protection system design effort, which permitted selection of the best suited materials for use in the design.

1. Primary Heat Shield:

Selection of MA-25s ablator as the primary material for the X-15 ablation system was made prior to contract initiation. The MA-25s sprayable ablator was, in fact, developed specifically for application over complex vehicle configurations such as the X-15. It incorporates all the required characteristics of an ablator for use in this type of application (see Table II-1), and design of the thermal protection system was centered around its use. Material screening was thereby limited to those material candidates for usage where the environmental extremes or functional requirements exceeded the capabilities of the MA-25s material. These areas included the aircraft leading edges where the heating rates and aerodynamic shear forces would have caused excessive errosion and spallation of the MA-25s char layer. Areas of the aircraft subject to high bearing loads which would cause permanent deformation or abrasion of the relatively friable MA-25s ablator also required a substitute material.

2. Leading Edge Materials:

The environmental conditions present at the aircraft leading edges necessitated the use of molded, fiber reinforced elastomeric silicone materials or flexible bonded reinforced phenolic ablators. Four materials and two fabrication variations were evaluated for use as leading edges by exposure to representative environments in the plasma arc. Specimens were fabricated from low density silica phenolic, ESA 3560-IIA, ESA 3560-IIB, and a mixed fiber elastomeric silicone material. In addition, ESA 3560-IIA models were made incorporating a silica fabric overlay and a fabric underlay. Test exposures were selected to approximate the peak and average heating conditions to be experienced on the aircraft. Based on the thermal performance exhibited during these tests, ESA 3560-IIA was selected for leading edge usage.

3. Hard Point Materials:

A few areas on the aircraft must sustain relatively high bearing loads. These include the bearing pad at the forward jack point, and the areas under the drop tank inboard sway braces. Inability of the MA-25s material to withstand such loading without experiencing permanent set or damage necessitated use of a substitute material. The suitability of four materials was checked both mechanically and thermally. All the candidate materials (RTV 560, RTV 758, DC 93-027 (Modified), and DC 93-046) were capable of withstanding the compressive load without damage or significant permanent deformation. Thermal exposure in the plasma arc, however, clearly showed the superiority of the DC 93-027 (Modified) material.

4. Repair Material:

From the outset, the need for a quick and reliable repair method for the ablator application was apparent. The primary MA-25s ablator material, without the solvents required to lower its viscosity to sprayable limits, satisfies the requirements for a repair material, and no additional material screening was conducted. Plasma arc testing was used to verify that material thermal performance was not adversely affected by application mode.

5. Wear Layer:

The degree of LOX impact sensitivity exhibited by the primary ablator materials coupled with their relatively friable nature made protection by an external wear layer advisable. Commercially available materials were reviewed, and DC 90-090 material selected for use. This material is LOX compatible, and provides a tenacious, tear resistant film over the ablator application. Like the primary ablator, it is spray applied.

B. Material Design Data

A thorough understanding of the behavioral characteristics of the materials used in the design of the ablation system is paramount to the validity of the system design. A diverse series of tests were conducted to obtain the pertinent physical and mechanical properties of the materials chosen for use in the ablation system. To verify the accuracy of the established material properties, a series of thermal test exposures provided data to correlate predicted and observed material performance.

1. Test Types and Methods:

Tensile property tests were conducted in the Mechanical Properties Laboratory of the Martin Company, on the three ablator materials used in the thermal protection system. Testing was performed in a 5000 lb. Baldwin Lima Hamilton Universal Test Machine with specimen deformation measured by an optically monitored slide rule extensiometer. Specimens were of the conventional "dog bone" configuration, and tests were conducted at temperatures ranging from -100° F to +500° F. A liquid nitrogen controlled low temperature environmental chamber was utilized during the low temperature tests, while an Amineo High Temperature Test Oven was used for the elevated temperature testing.

Tests to determine the physical properties of the ablator materials were conducted in the Thermal Properties Laboratory of the Martin Company. Because of the extremely limited use of the hard point material DC 93-027 in the ablation system design, it was excluded from this test series for economic reasons. However, the thermal performance characteristics of this material were verified during the plasma arc tests.

A Guarded Hot Plate Thermal Conductivity Apparatus was used to determine material thermal conductivity over a temperature range from -300° F to +1000° F. Tests were conducted in accordance with ASTM C177-63, and employed 9-inch diameter by 1/2-inch thick discs of material. The inability to obtain sufficient char for fabrication of specimens precluded obtaining values for the charred MA-25s material. The data used in the system design was estimated, based on other similar resin system characteristics.

Ablator specific heat values were determined in an Adiabatic Drop Calorimeter Apparatus in accordance with ASTM C351-61, and utilized specimens 3/4-inch in diameter and 3-inches long. The range of temperatures for these tests also extended from -300° F to +1000° F.

A Quartz Dilatometer was employed to determine material linear thermal expansion using specimens 1/2 inch square and

3 1/2-inches long. Testing was conducted in accordance with ASTM D696-44 for the range of temperatures from -300° F to +800° F.

The total normal emittance for both the virgin and char states of the ablator materials was obtained in a Gier Dunkle Reflectometer for the -300° F to +1000° F temperature range. Specimens consisted of 1-inch diameter by 1/16-inch thick wafers of test material bonded to copper discs with conductive silver epoxy paste.

Also included were Thermogravimetric Analysis and Differential Thermal Analysis to determine the thermochemical properties of the ablator materials. TGA data was determined in the Aminco Thermograph on 100-200 mg samples of the base material. An Argon atmosphere was used to eliminate oxidation during the tests. DTA was conducted in a DuPont 900 Differential Thermal Analyzer, on 25-50 mg quantities of the base material. A helium atmosphere was utilized during this analysis.

Heat shield material compatibility testing consisted of liquid and/or vapor immersion exposures of the ablators to the various system fluids of the X-15-2. These included: water, anhydrous ammonia, hydrogen peroxide liquid and steam, liquid and gaseous oxygen, liquid and gaseous nitrogen, non-petroleum base oronite hydraulic fluid, MIL-H-5606 hydraulic fluid, and gaseous helium. For these exposures, 2 x 2 inch specimens of ablator material applied to an Inconel X substrate were immersed in the test fluids for 1 hour, followed by a 24-hour drying period at standard laboratory conditions. Changes in specimen weight and hardness are determined following exposure, and visual changes noted. The above testing was conducted in the Chemical Laboratories of the Martin Company Baltimore and Denver divisions, and their results are presented in Table III-1.

The last performance testing, of consequence in influencing the ablation system design, was determining the impact sensitivity of various ablators when immersed in LOX. An initial test series, conducted at Martin Denver in accordance with MSFC Spec-106A, disclosed that the materials were, to varying degrees, impact sensitive. Further testing was performed to determine the threshold energy level for detonation, and to evaluate the effectiveness of various LOX compatible materials applied over the ablator surface. Concurrently, a series of tests were conducted "in house" to learn more about the nature and extent of the detonations. These tests resulted in establishing a threshold energy level of 8.5 ft. lbs/in^2 for detonation of the unprotected MA-25s material. Two LOX compatible materials were found for use as a protective layer over the MA-25s, but only the selected DC 90-090 exhibited the abrasion resistance necessary in this application.

It is interesting to note that when samples of teflon, the material most often used as valve seats for LOX system components, were impact tested they suffered physical damage (i. e., samples cracked or split) at levels above the 8.5 ft lb/in^2 threshold for MA-25s detonation. No chemical reaction (detonation) was observed, for teflon is a known compatible material, but the damage observed would imply that normal LOX component design would limit impact energies sufficiently to preclude detonation of ablator contamination, were it present in the system.

The "in-house" impact tests were performed on ablator-substrate specimens sufficiently large to determine the extent and propagation tendencies of the impact initiated reactions. These tests showed the reaction to be localized to the immediate area of impact. No tendencies for the reaction to propagate away from the point of original detonation were exhibited in any of the test impacts. The few specimens which ignited due to residual LOX over their surface, tended to be self-extinguishing once the LOX was dissipated. See Fig III-1 & 2.

2. Data Correlation:

Two sources were available to provide data for validation of the ablator material properties gleaned from the aforementioned tests: (1) plasma arc model tests, (2) flight testing of representative ablator installations. Unfortunately, abortive flights of the X-15 coupled with loss of airborne instrumentation completely negated analytically usable results from the flight test program. The flight test applications did show, visually, ablator performance as expected with no extraordinary behavioral characteristics.

Analytical verification of the material properties was accomplished solely through correlation of plasma arc model performance with theoretically predicted response. Test models incorporated an ablator layer over a thermally isolated inconel disc and thermocouples were provided to monitor both ablator surface and inconel disc temperature responses. Transient calorimeter assemblies were used to obtain the actual model convective heat input at the various test conditions. During testing, some of the model surface thermocouples raised off the surface thereby giving erroneous results. The theoretical performance predictions of model inconel disc temperature responses were, therefore, based on either a convective heat input or a surface temperature describer depending upon the integrity of the particular model surface thermocouple at test completion.

In general, data correlation was good, with predicted and observed peak temperatures closely matching. Because of this, no adjustment was made to any of the material properties to obtain a better curve "fit." Typical examples of the test models and their resultant correlation curves are shown in Figures III-3 thru III-5.

3. Summary of Material Properties:

This report section presents the ablator material properties as applicable to the design of the X-15-2 thermal protection system. It should be noted that the properties determined for the hard point material were limited to those of direct interest for its design usage. Constant valued properties are listed tabularly below the basic material heading, while temperature dependent properties are presented graphically in the Figures III-6 thru III-31.

Primary Ablator MA-25s

Virgin density	= 28 lb/ft^3
Char density	= 9.8 lb/ft^3
Heat of pyrolysis	= 75 Btu/lb
Specific heat of vapor	= .60
Reaction kinetics:	$\frac{\delta \lambda}{\delta \tau} = - K \lambda^n$

where:

n = reaction order = 0

K = reaction constant = $1.73 \times 10^4 \, e^{\frac{-24000}{T}} \, \text{sec}^{-1}$

λ = weight fraction = $\frac{\rho - \rho_c}{\rho_p - \rho_c}$

τ = time in seconds

T = temperature in ° R

ρ_c = char density

ρ_p = virgin plastic density

ρ = degrated ablator density

Leading Edge ESA 3560-IIA

Virgin density	56 lb/ft^3
Char density	21.3 lb/ft^3
Heat of pyrolysis	124.5 Btu/lb
Specific heat of vapor	.60
Reaction kinetics:	$\frac{\delta \lambda}{\delta \tau} = -K \lambda^n$

where:

$n = 0$

$K = 4 \times 10^{10} e^{\frac{-34100}{T}} \sec^{-1}$

Hard Point Material DC 93-027

Density	75 lb/ft^3

Aircraft Structure Inconel X

Density	.3 lb/in^3
Emissivity*	.895 at 1060° R, .925 at 2460° R

*Values for NASA oxidized surface.

DC 90-090 Wear Layer Data

Emissivity	.75	@	70°F
	.798	@	500°F
	.766	@	1000°F

C. System Design Procedure

The basic methods used to establish the design requirements of the ablative thermal protection system are defined in this report section. The general procedure consists of generating a set of design curves which relate total heat input to ablator and substrate thicknesses for a given substrate design temperature limit. In conjunction with the design curves, the total heating distribution and substrate thickness variations are determined for the body to be protected. The heating distribution can be obtained analytically, experimentally or from actual operating history. In the case of the X-15-2 vehicle, theoretical heat loads were provided by NASA for a number of discrete points over the aircraft surface. The locations and heat flux profiles for these points have been defined earlier in the text and figures of section II-2 of this report.

1. Design Curve Evolution:

The design curves used to size the ablator layer over the aircraft are obtained from a cross plot of the curve family relating substrate temperature to ablator thickness for different heat inputs. A representative set of these curves are shown in Fig. III-32. The data for these curves was obtained by analytically subjecting a thermal model, consisting of an ablator layer over an inconel substrate, to the convective heating environment associated with the Mach 7.4 design mission. Model thermal performance was computed using the Martin Company T-Cap III Ablation Analysis Program with the assumptions that the model back face was adiabatic, and that both the ablator and inconel layers were initially at a specified soak temperature. An initial temperature of -20° F was used for analysis combinations except those associated with the LOX tank area of the aircraft. For this area, an initial temperature of -250° F was used. These temperatures were selected to be representative of the temperatures experienced at the X-15 launch altitude and by the aircraft skin adjacent to the LOX tank, respectively. A number of analyses were made for fixed total heat inputs and substrate thickness, but various ablator layer thicknesses. Resulting maximum substrate temperatures were plotted for each heating total and substrate thickness. This process was repeated until sufficient data was available to establish the design curves over the range of interest.

A cross plot of this initial curve family at the desired design limit temperature yields a set of curves which specify the ablator thickness required to maintain the various substrate thicknesses at the design limit temperature. In the design of the thermal protection system for the X-15A-2 aircraft, a limit temperature of 600° F was selected for the skin beneath the sprayable ablator, and 500° F was utilized in areas of the bonded on leading edge sections.

It should be noted that these design curves are not directly dependent upon either the vehicle to be protected or the design mission. These variables serve only to establish the range of values over which the design curves must be defined. The controlling factors in their development are the ablator material properties and the limit temperature selected for the substrate. The evolved curves used for sizing the ablative layer for the X-15 are shown in Figs. III-33 and III-34.

2. Leading Edge Section Design:

Stagnation point heating data was provided for all the leading edge areas of the aircraft (reference Table II-3). In designing the molded ablator sections to be used in these locations, the increase in nose radius due to the ablator thickness was taken into consideration by reducing the total heat pulse by the following relationship:

$$\dot{q}_A = \sqrt{\frac{R_S}{R_A}} \quad \dot{q}_S$$

where:

$\dot{q}_A$ is the heating rate experienced by the ablator leading edge in Btu/ft^2-sec.

$\dot{q}_S$ is the heating rate (as supplied) on the aircraft skin in Btu/ft^2-sec.

R_A is the nose radius of the molded ablator part.

R_S is the nose radius of the aircraft skin.

The inverse dependence of stagnation heating rate to the square root of the nose radius is well known, and the zero surface recession of the molded ablator leading edge parts allows use of this reduction of heat environment in the design. The reduced stagnation heating totals used in the leading edge sections design are presented in Table III-2.

The table includes the ratioed heating totals for both the Mach 8 and the new Mach 7.4 design missions. Current leading edge designs are based on the Mach 8 heat inputs since the tooling was completed early in the program to support the flight test experiments of the developmental phase. The detail parts are, therefore, oversize for the new design trajectory, and their use will result in a considerable substrate temperature gradient in the adjacent areas. The ablator system design philosophy was to maintain maximum skin temperatures of 1060° R and 960° R under the sprayed ablator and molded details, respectively. A spot check of the wing leading edge (Figure III-35) indicates that a maximum temperature of 750° R will be experienced using the current detail for a Mach 7.4 mission. Similar results can be expected elsewhere, and the temperature gradient effects must be considered along with the potential weight savings when deciding if tooling modifications are justifiable.

The heating distribution around the leading edges from the stagnation point were supplied, in most cases, by NASA, and were based on the laminar heating distribution around a cylinder as determined by Lester Lee. Heating distributions around the canopy and vane antenna leading edges were not supplied, and were generated by Martin using a Newtonian pressure distribution and a family of curves similar to Lee's, but relating the laminar theory from Kemp, Rose and Detra. Figures III-36 thru III-40 show the heating distributions used in designing ablator leading edge parts for the wing, horizontal stabilizer, verticle tail, canopy, and antenna, respectively.

These distributions are valid only to the tangency point of the leading edge radii, and other similarity laws apply past this point. Distributions are given as a function of angle from stagnation (θ) where the leading edge radius is constant. A dimensionless surface length ratio (S/R) is utilized where the nose radius varies along the control surface.

3. Primary Ablator Layer Design:

The availability of calculated heating data at various points over the vehicle provided a direct method of determining the heat flux distributions for the aircraft. This eliminated the necessity of utilizing various similarity laws and idealized distributions to establish the heating variations over the X-15, and thereby limited the uncertainty of results to that associated with the supplied heating calculations.

In conjunction with the heating distributions, knowledge of the thermal mass available over the aircraft (i. e., skin, doublers, frames, stringers, gussets, etc.) is required to select ablator thicknesses from the design curves. For sake of expediency and conservatism of ablation system design, only the local skin gage was used in determining the available thermal mass.

Determination of primary ablator thickness requirements over the vehicle consists of matching the total heat input with the available thermal mass at various points on the aircraft. The design curves of Fig. III-34 are then used to find the ablator requirements for that particular combination of heating and skin gage. This procedure must be repeated a sufficient number of times to completely define the ablator layer over the aircraft.

Figures III-41 thru III-53 show the data point, ablator grid network, total heat input, and skin gage distributions for the various portions of the aircraft. It should be noted that the fuselage heating distributions over the side fairings, shown in Fig. III-42, is assumed to be the average of the upper and lower centerline heating values for the same fuselage station.

The heating distribution over the modified ventral fin (Fig. III-53) is assumed to be the same as for the full ventral, for equal distances along the ramp sides from stagnation. The reduced chord dimension, however, results in a fore-shortening of the heating vs L/C curve from that shown in Fig. III-51.

Heating data was not provided for the dummy ramjet, since NASA supplied the ablator requirements directly.

4. Aircraft Preparation:

Certain features of the X-15A-2 aircraft are not directly amenable to the application and performance of the ablative thermal protection system. The following list defines those tasks which should be accomplished by the Government prior to ablation system application.

Design Feature	Required Government Action
Ball Nose Ring	Provide new machined ring with an aft facing step to allow a smooth butt joint with the ablator layer.
B.C.S. Nozzles	Nozzle aperatures to be plugged. Plugs must be removable in locations of righting sling attachment.
Canopy Window	Protect left side window from deposition of ablation products by means of a mechanical shutter.
Static Pressure Taps	Plug holes if deemed necessary to protect system from possible clogging with ablator spray.
Fuselage Camera Window	Remove window and replace with blank panel.
Flap to Fuselage Seal	Remove metallic wiper seal between flap and fuselage.
Wing to Fuselage Gap	Tack weld a fillet of inconel foil over gap between wing and fuselage forward of front spar.
Horizontal Stabilizer Alignment Gage	Provide spacers and longer attachment bolts to eliminate interference between gage and ablator leading edge.

In addition to the above, the following propulsion propellant system modifications would enhance the confidence level of the overall contamination control program. Although adequate system protection is provided by the ablation system design and the protection procedures established, these recommended modifications would furnish additional contamination protection.

a. LOX fill - incorporate a filter element in the fill line between connector 111 and check valve 113A.

b. LOX vent helium supply - add filter in helium line where it enters 102 vent valve.

c. LOX drop tank vent helium supply - add filter in helium line where it enters 120 vent valve.

d. LOX jettison line - add filter in jettison line to protect it.

e. LOX drop tank vent disconnect - install flapper valve in connector 122 of drop tank vent line.

f. B-52 pylon LOX top off overflow - investigate addition of temporary trough or splash shield under attachment to protect ablator coated X-15 surface from LOX spillage during ground servicing.

g. B-52 pylon LOX vent line - investigate addition of a temporary line over this pipe to direct LOX flow to the ground during servicing operations.

TABLE III-1
ABLATOR MATERIAL - SYSTEM FLUID COMPATIBILITY

ABLATOR MATERIAL	WATER	LIQUID HYDROGEN PEROXIDE	HYDROGEN PEROXIDE VAPOR	LIQUID NITROGEN	GASEOUS NITROGEN	LIQUID OXYGEN	GASEOUS OXYGEN	ORONITE 8515	MIL-H 5606	GASEOUS HELIUM	ANHYDROUS AMMONIA
MA-25S	COMPAT	COMPAT	COMPAT	COMPAT	COMPAT	IMPACT SENSITIVE WHEN IMMERSED	COMPAT	COLOR CHANGE & 1% WEIGHT GAIN	COLOR CHANGE & 1% WEIGHT GAIN	COMPAT	COMPAT
ESA3560-II-A	COMPAT	COMPAT	COMPAT	COMPAT	COMPAT	IMPACT SENSITIVE WHEN IMMERSED	COMPAT	COLOR CHANGE & 1% WEIGHT GAIN	COLOR CHANGE & 1% WEIGHT GAIN	COMPAT	INDICATES SURFACE COLOR CHANGE
DC 93-046	COMPAT	COMPAT	COMPAT	COMPAT	COMPAT	MODERATELY IMPACT SENSITIVE WHEN IMMERSED	COMPAT	SURFACE DEGRADATION ONLY	SURFACE DEGRADATION ONLY	COMPAT	COMPAT

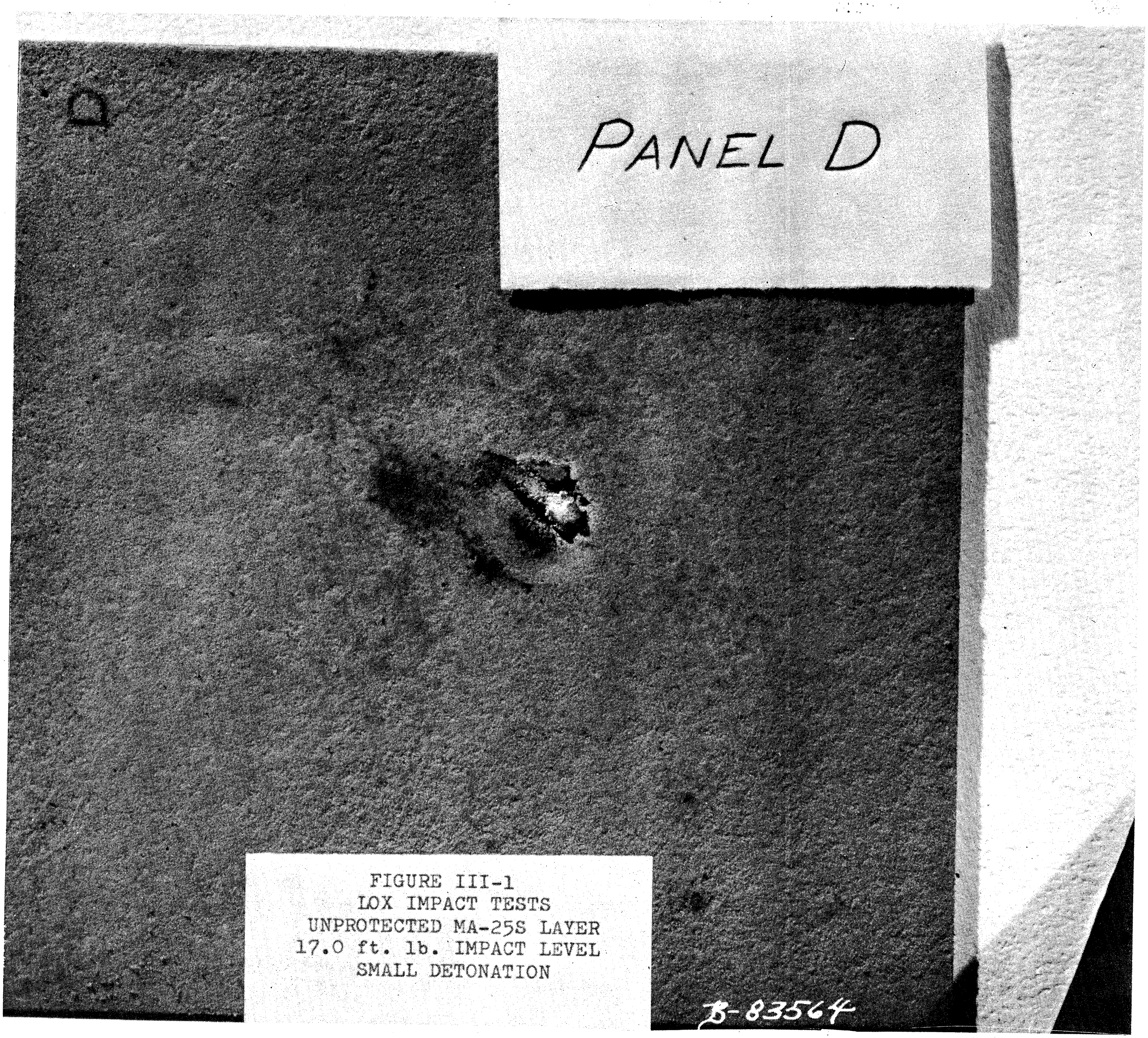

FIGURE III-1
LOX IMPACT TESTS
UNPROTECTED MA-25S LAYER
17.0 ft. lb. IMPACT LEVEL
SMALL DETONATION

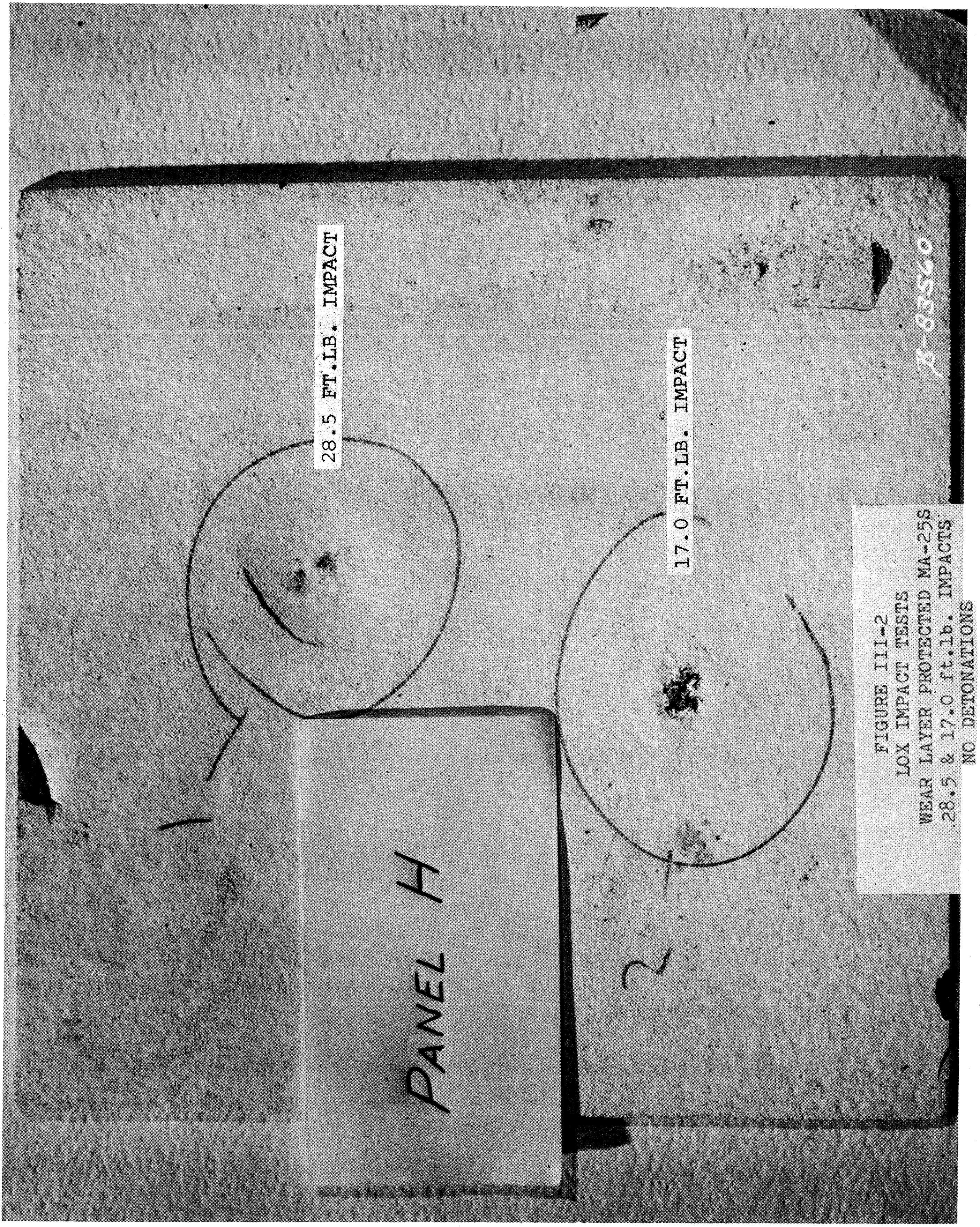

FIGURE III-2
LOX IMPACT TESTS
WEAR LAYER PROTECTED MA-25S
28.5 & 17.0 ft.lb. IMPACTS
NO DETONATIONS

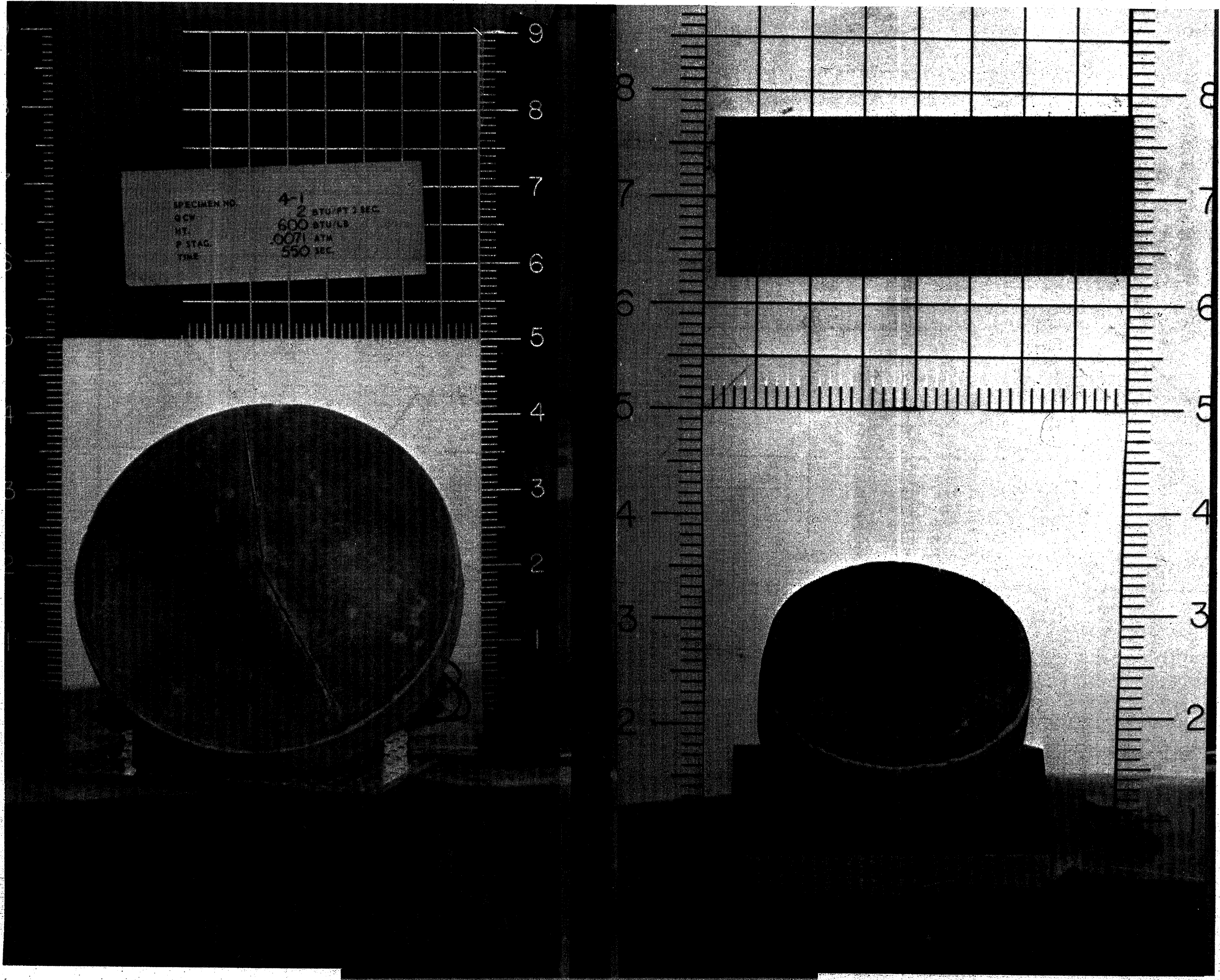

[redacted]

FIG. III - 3 TYPICAL PLASMA ARC MODELS

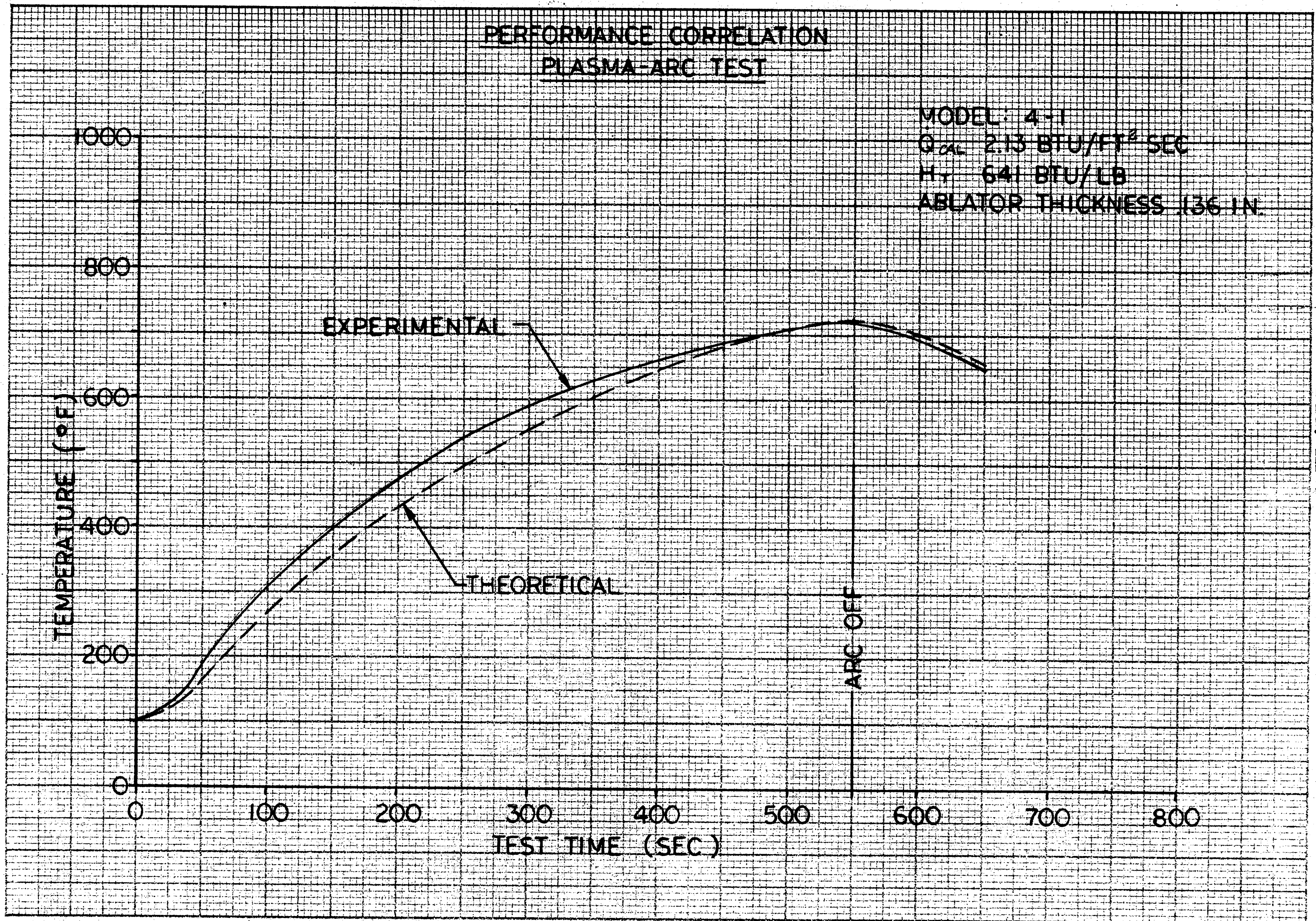
PERFORMANCE CORRELATION
PLASMA-ARC TEST
MODEL: 4-1
Q_{CAL} 2.13 BTU/FT² SEC
H_T 641 BTU/LB
ABLATOR THICKNESS .136 IN.
TEMPERATURE (°F)
0
200
400
600
800
1000
TEST TIME (SEC.)
0
100
200
300
400
500
600
700
800
EXPERIMENTAL
THEORETICAL
ARC OFF

FIG. III-4

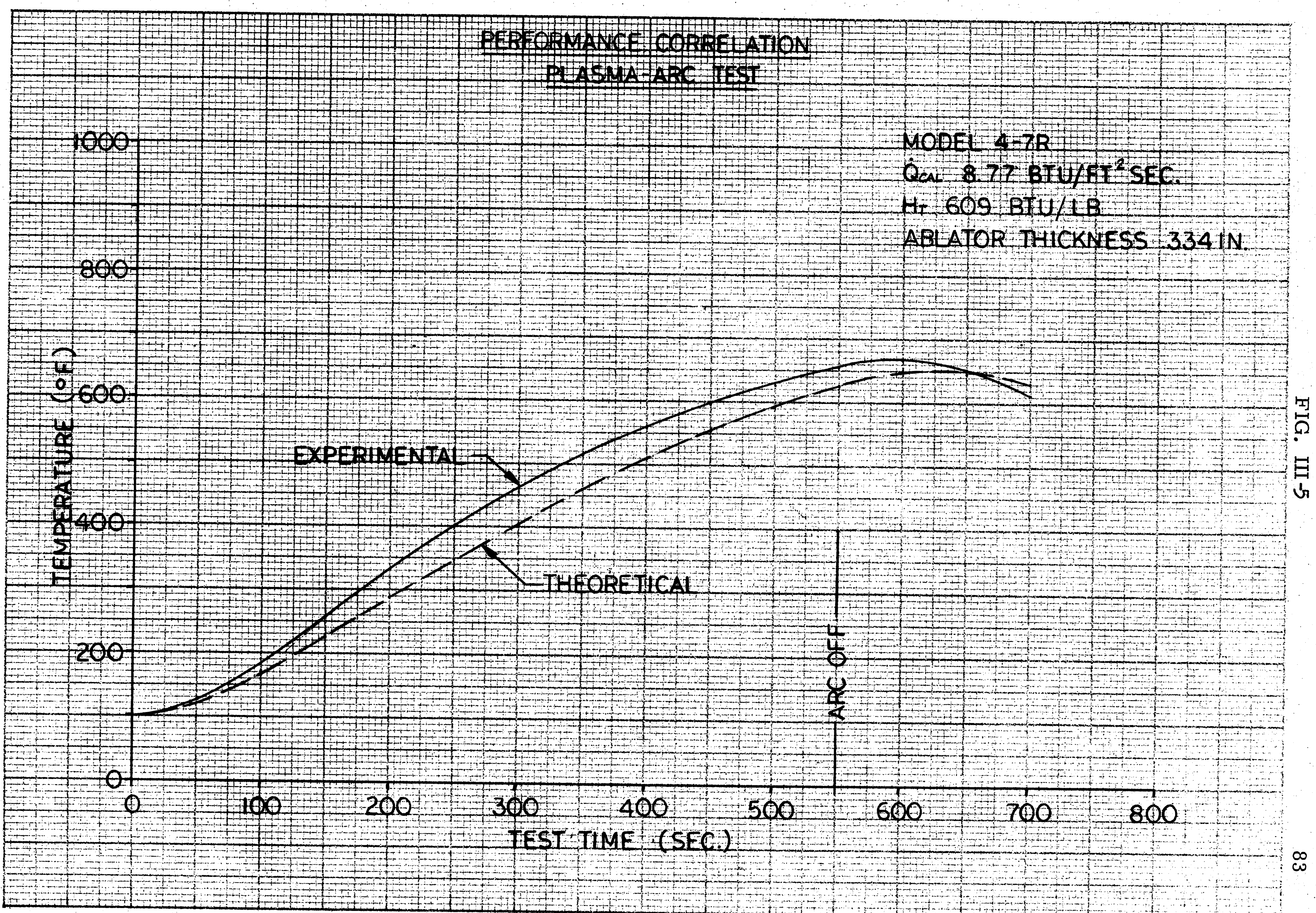
PERFORMANCE CORRELATION
PLASMA-ARC TEST

MODEL 4-7R
$\dot{Q}_{CAL}$ 8.77 BTU/FT^2 SEC.
H_r 609 BTU/LB
ABLATOR THICKNESS .334 IN.

FIG. III-5

ULTIMATE TENSILE PROPERTIES OF MA - 25S
VS
TEMPERATURE

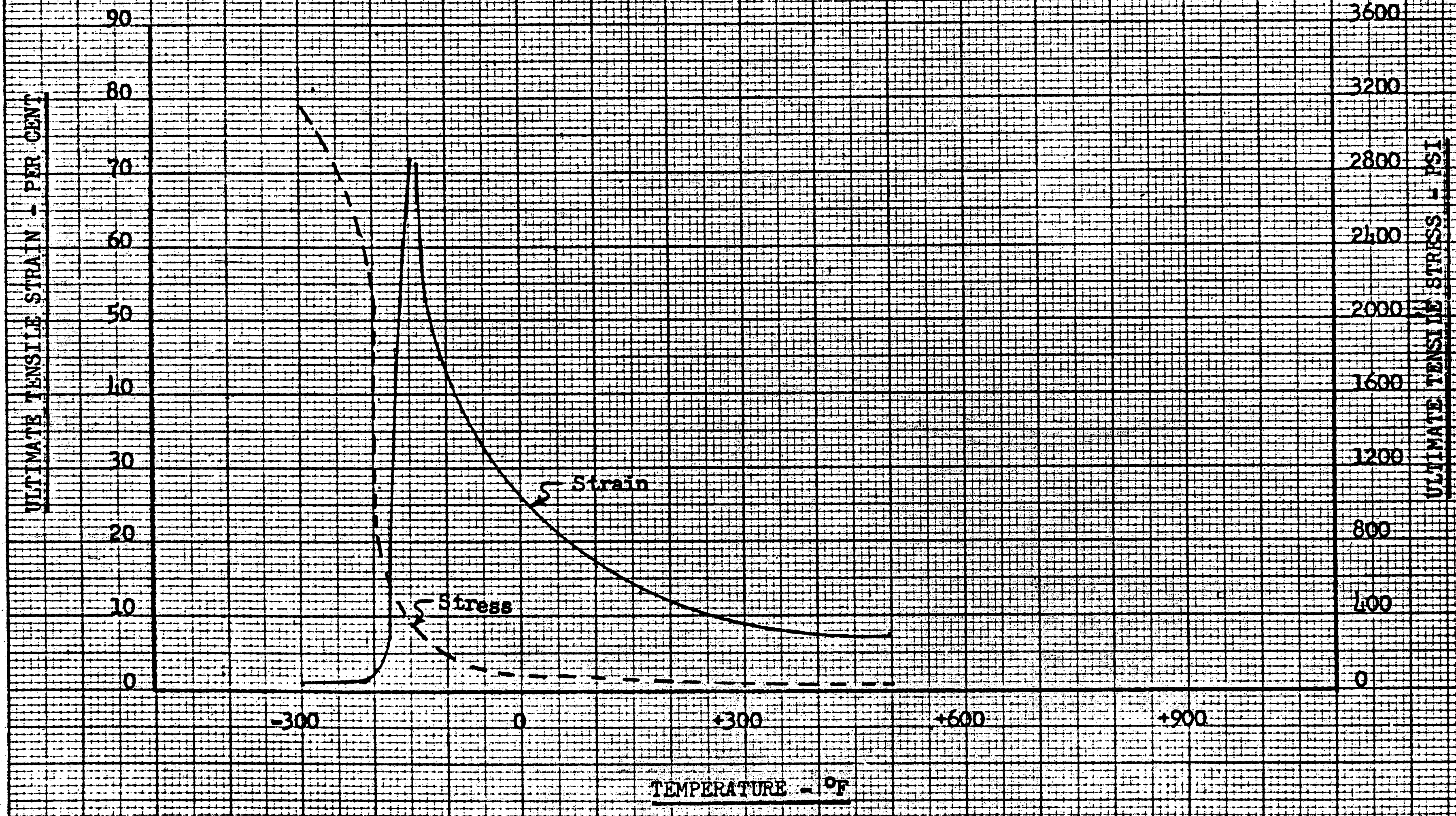

FIG. III-6

FIG. III-7

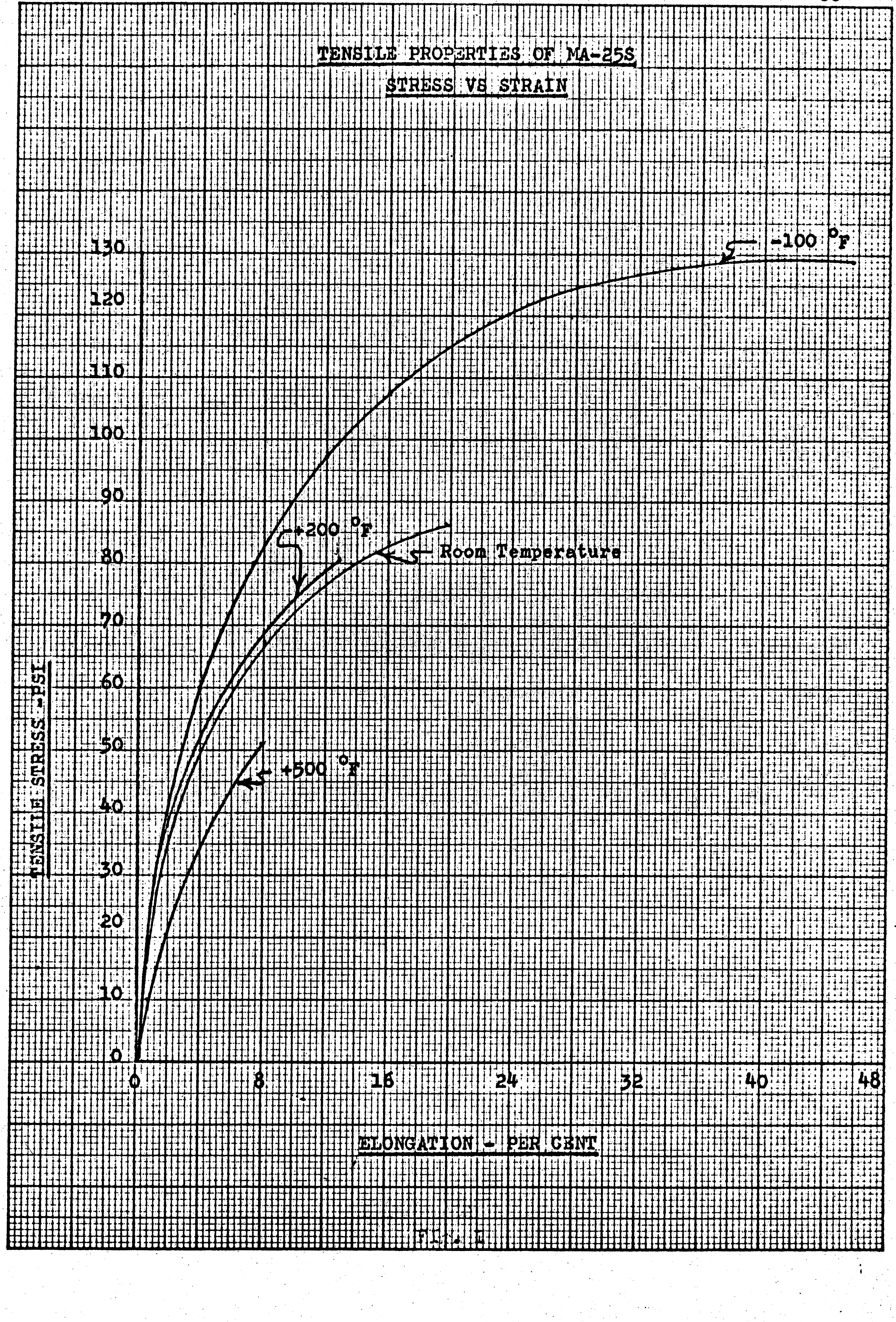

TENSILE PROPERTIES OF MA-25S

STRESS VS STRAIN

FIG. III-8

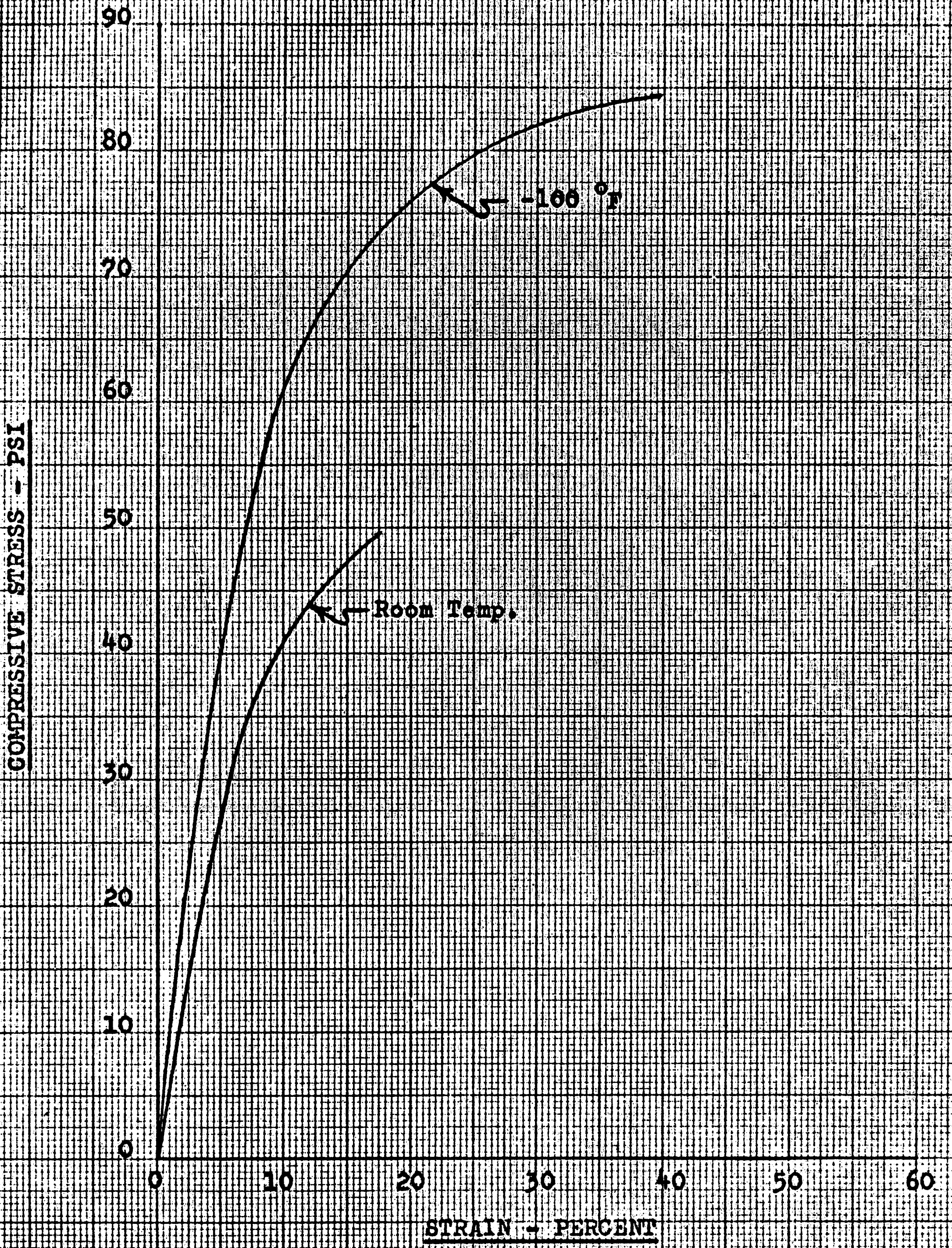

Compression Properties of MA-25S at Room Temperature and -100 °F

FIG. III-9

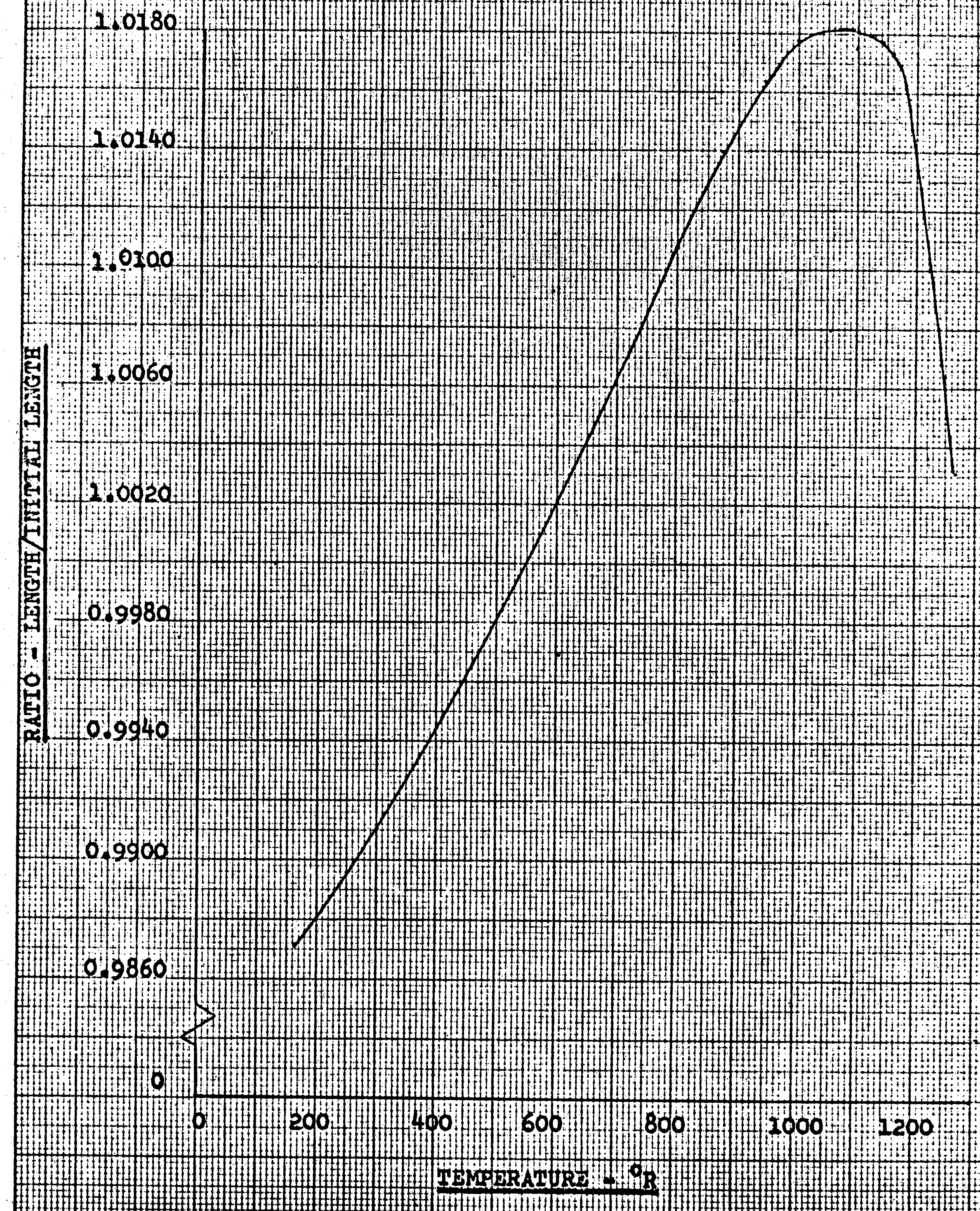

LINEAR THERMAL EXPANSION OF MA-25S

VS

TEMPERATURE

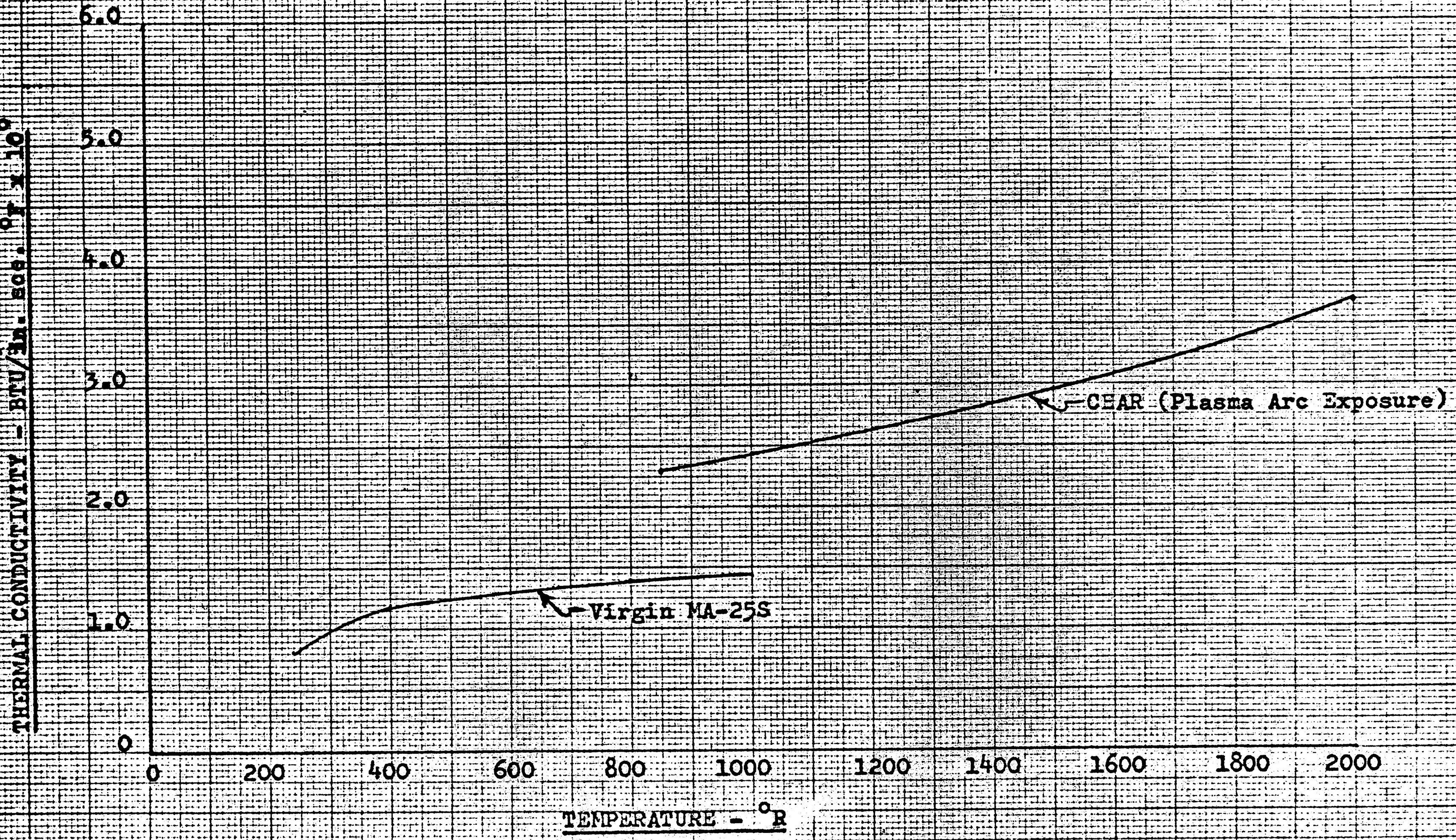

Thermal Conductivity of MA-25S Vs Temperature

FIG. III-10

SPECIFIC HEAT OF MA25S
VS
TEMPERATURE

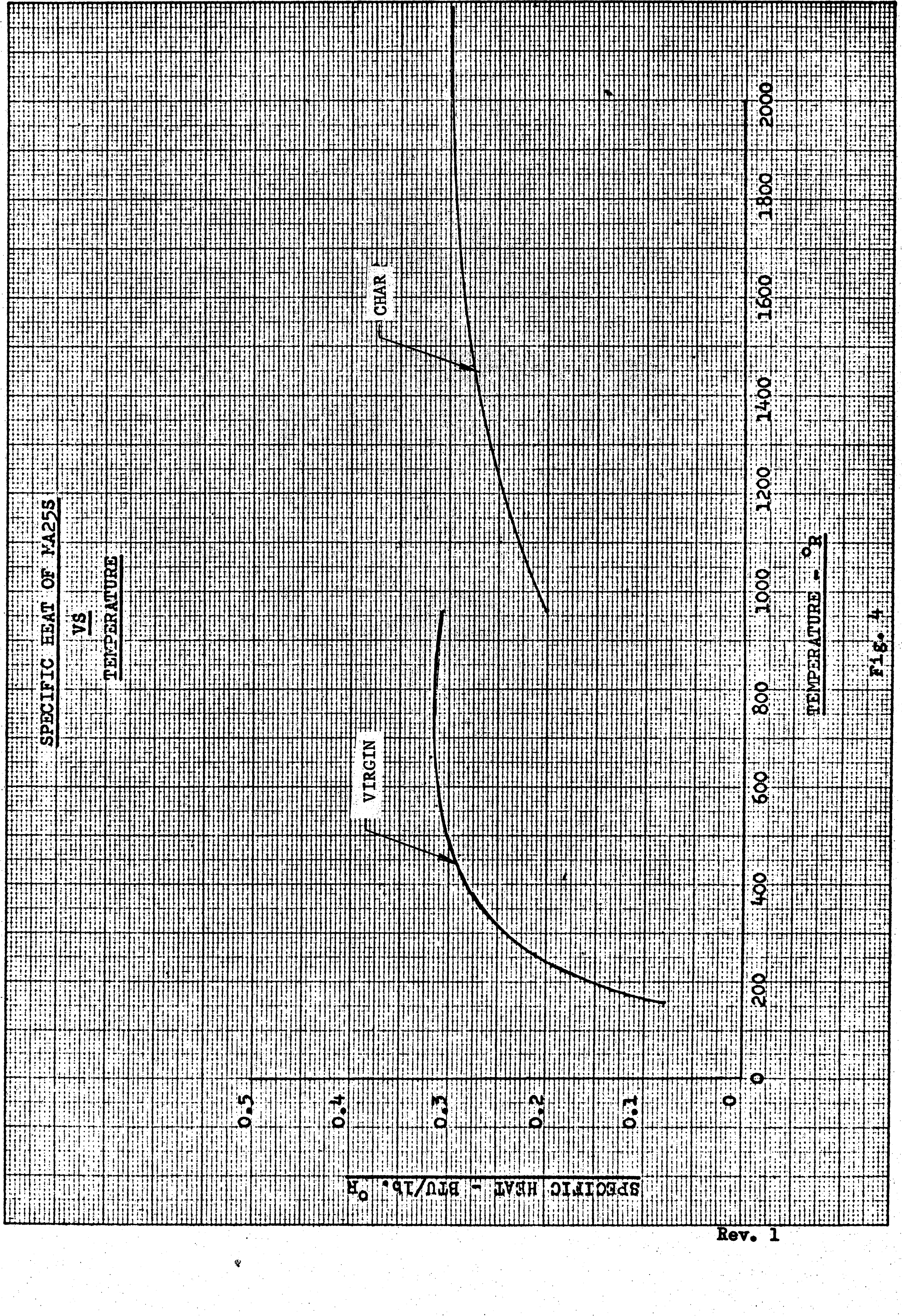

Fig. 4

SPECTRAL REFLECTANCE

Rev. 1

DATE:
SAMPLE NO: 217
DESCRIPTION: AS SPRAYED SURFACE OF MA-25S

α_s :
ϵ :
α_s/ϵ :

FIG. III-12

SPECTRAL REFLECTANCE

DATE:
SAMPLE NO: 267
DESCRIPTION: CHAR SURFACE OF MA-25S

α_s :
ϵ :
α_s/ϵ :

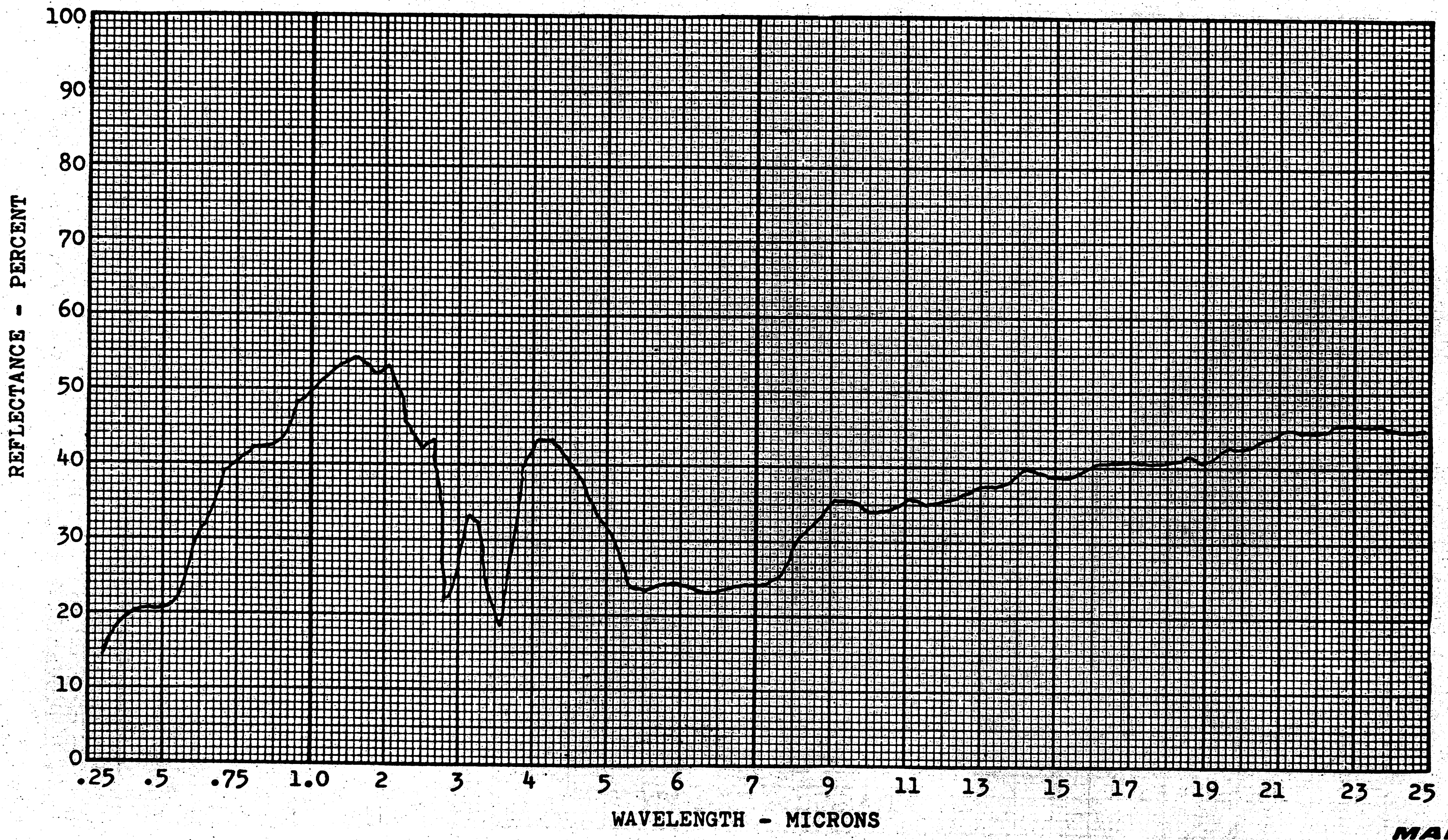

FIG. III-13

FIG. III-14

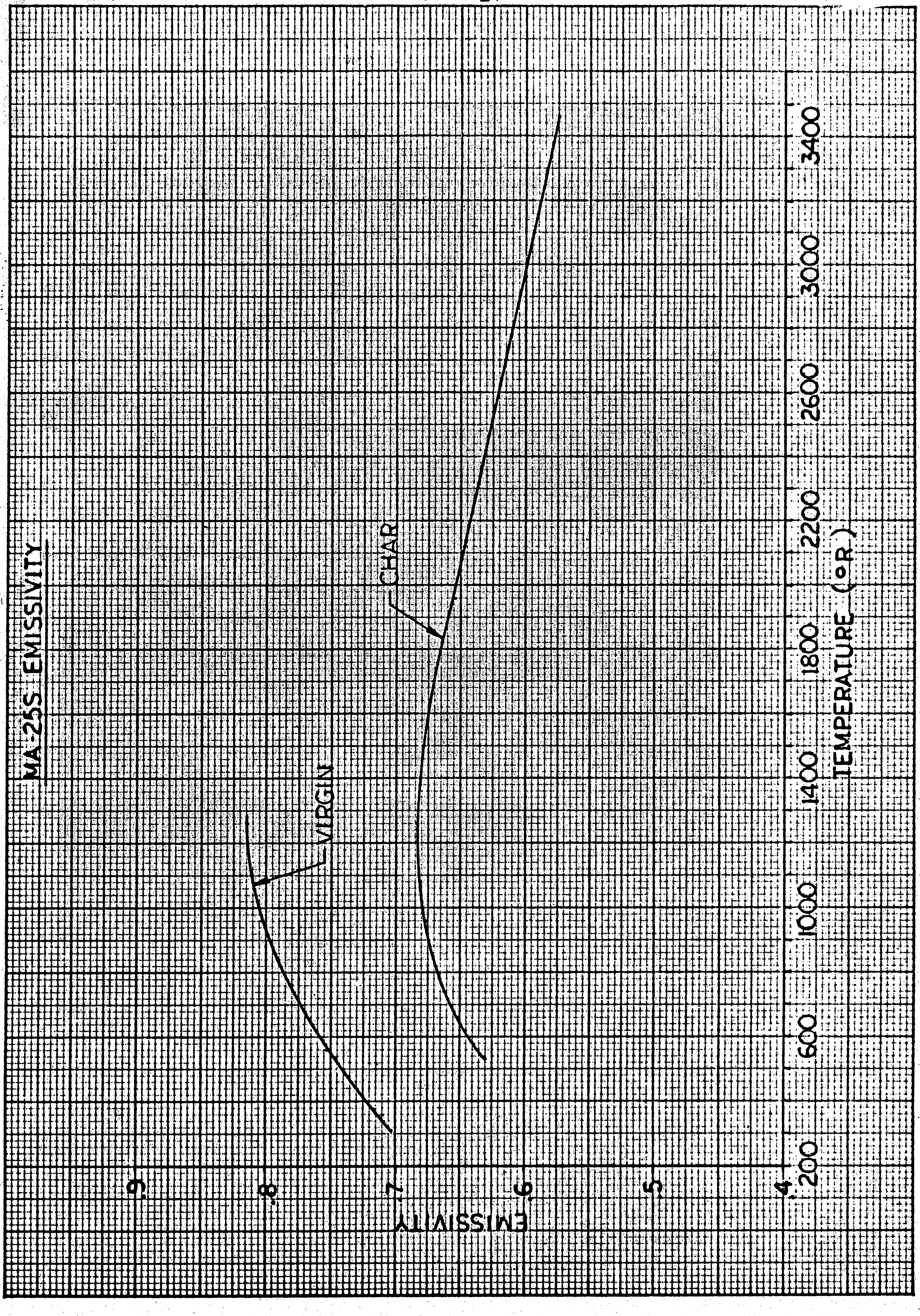
MA-25S EMISSIVITY
VIRGIN
CHAR
EMISSIVITY
.9
.8
.7
.6
.5
.4
200
600
1000
1400
1800
2200
2600
3000
3400
TEMPERATURE (°R)

FIG. III-15

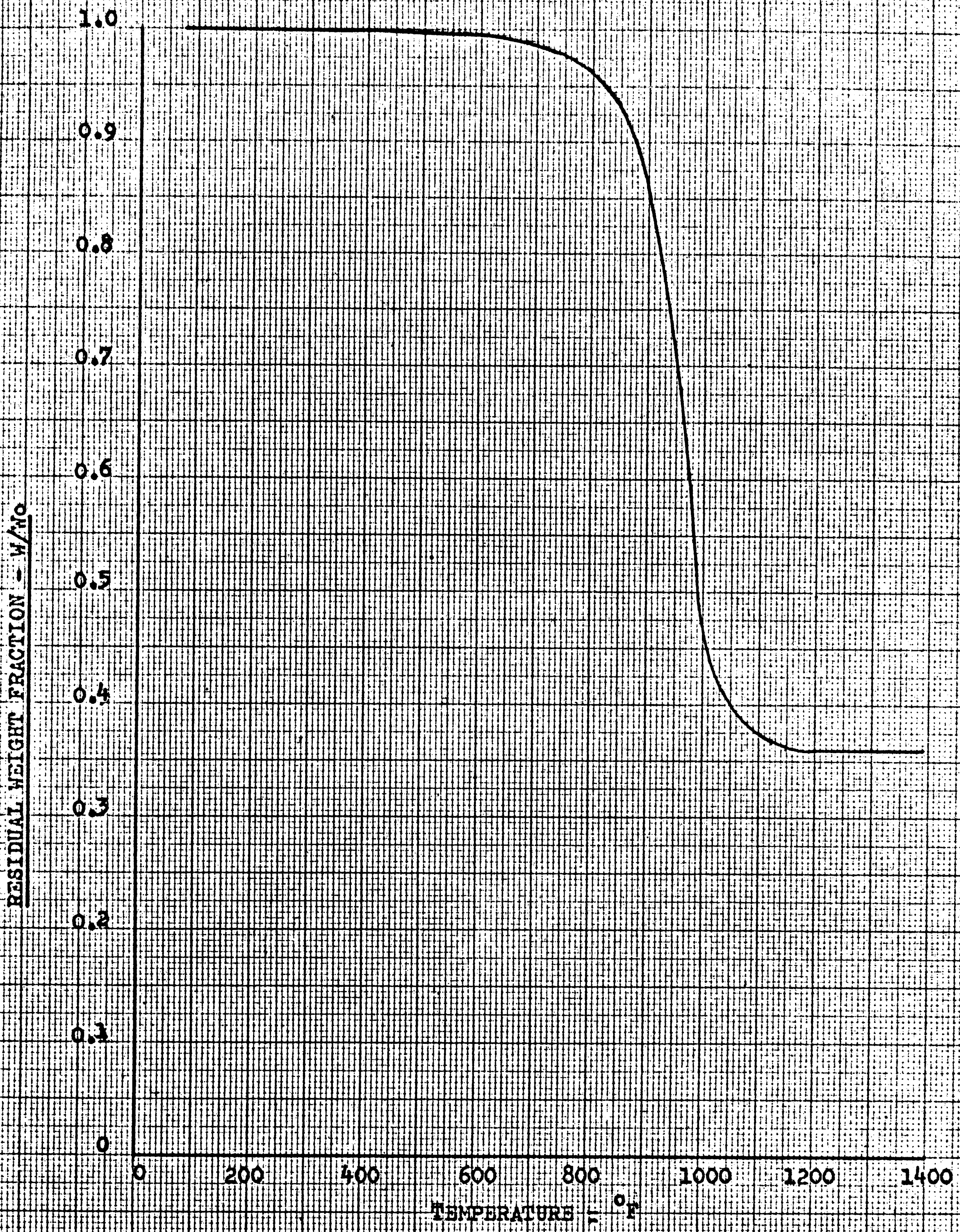

TYPICAL TGA THERMOGRAMS FOR MA-25S ABLATIVE MATERIAL

SAMPLE: MA - 25S

ORIGIN:

SIZE 850° Micro

REF. Al_2O_3

PROGRAM MODE Heat

RATE 6.0 °C/MIN. START 25 °C

ATM. He 2SCFH

	T	ΔT
SCALE SETTING	100 °C/IN.	0.2 °C/IN.

Weight = 53.170 Mgs

Residue = 18.122 Mgs

RUN NO.

DATE

OPERATOR

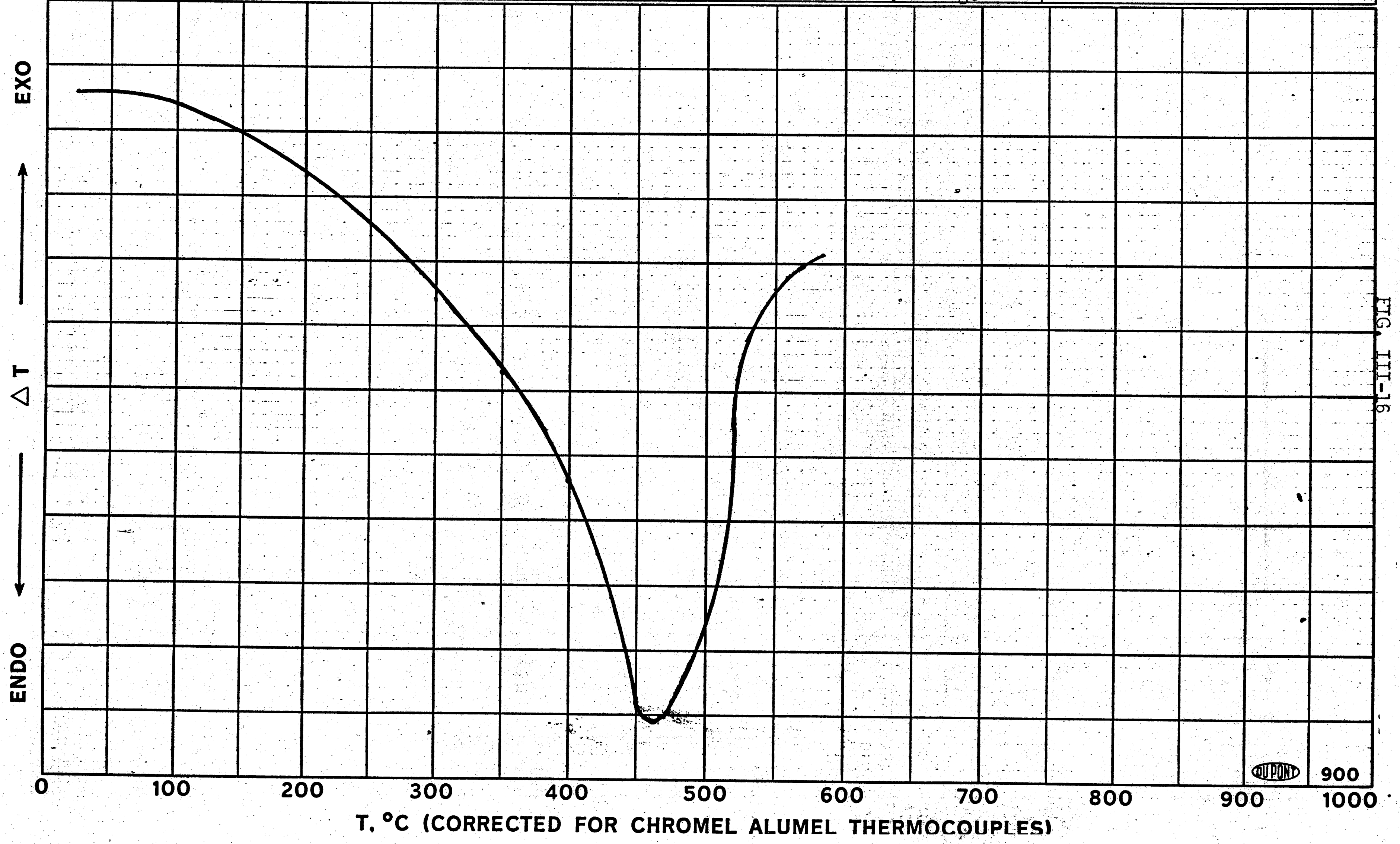

FIG. III-16

FIG. III-17

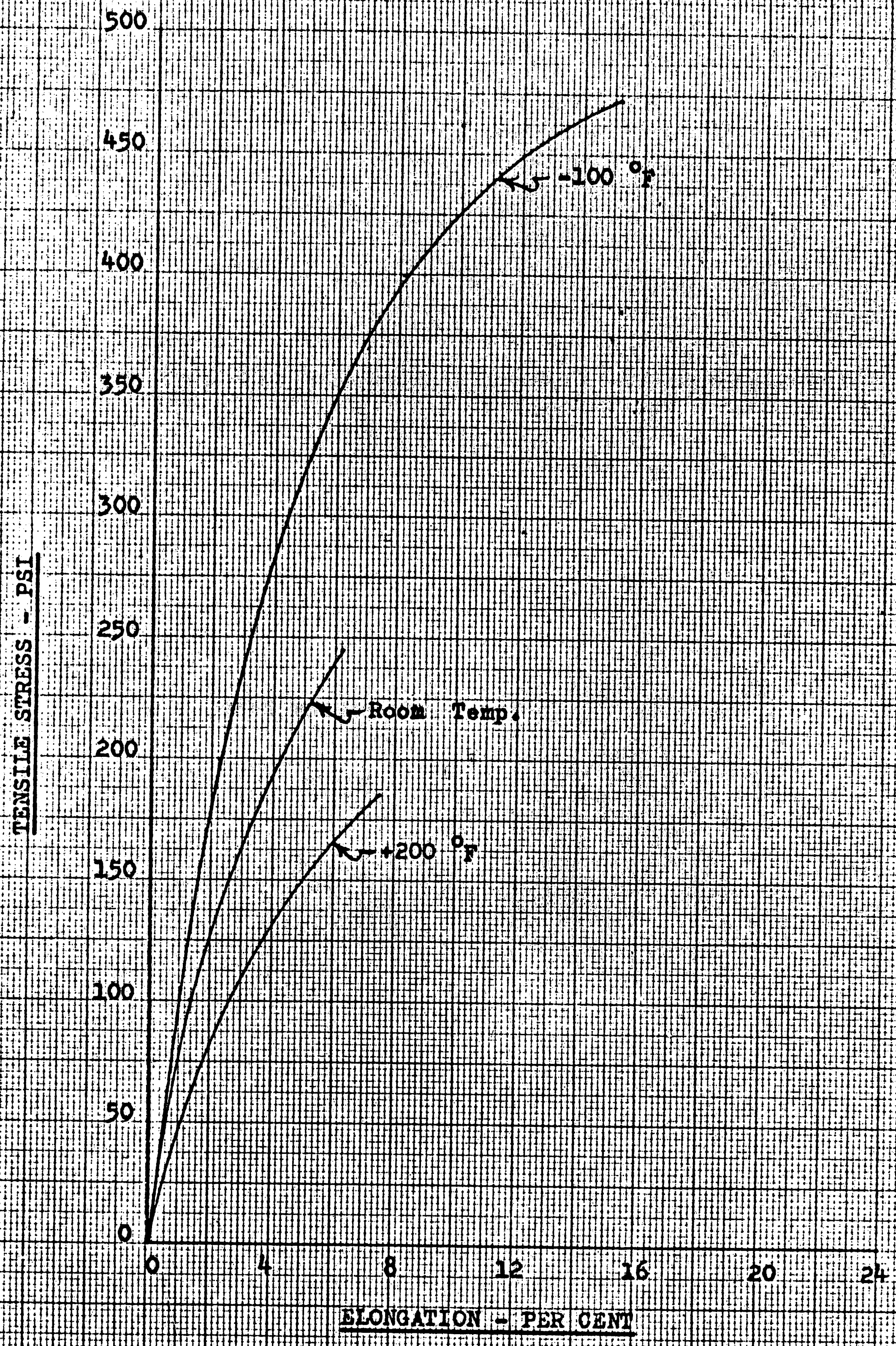

Tensile Properties of ESA 3560, Type IIA at Various Temperatures

FIG. III-18

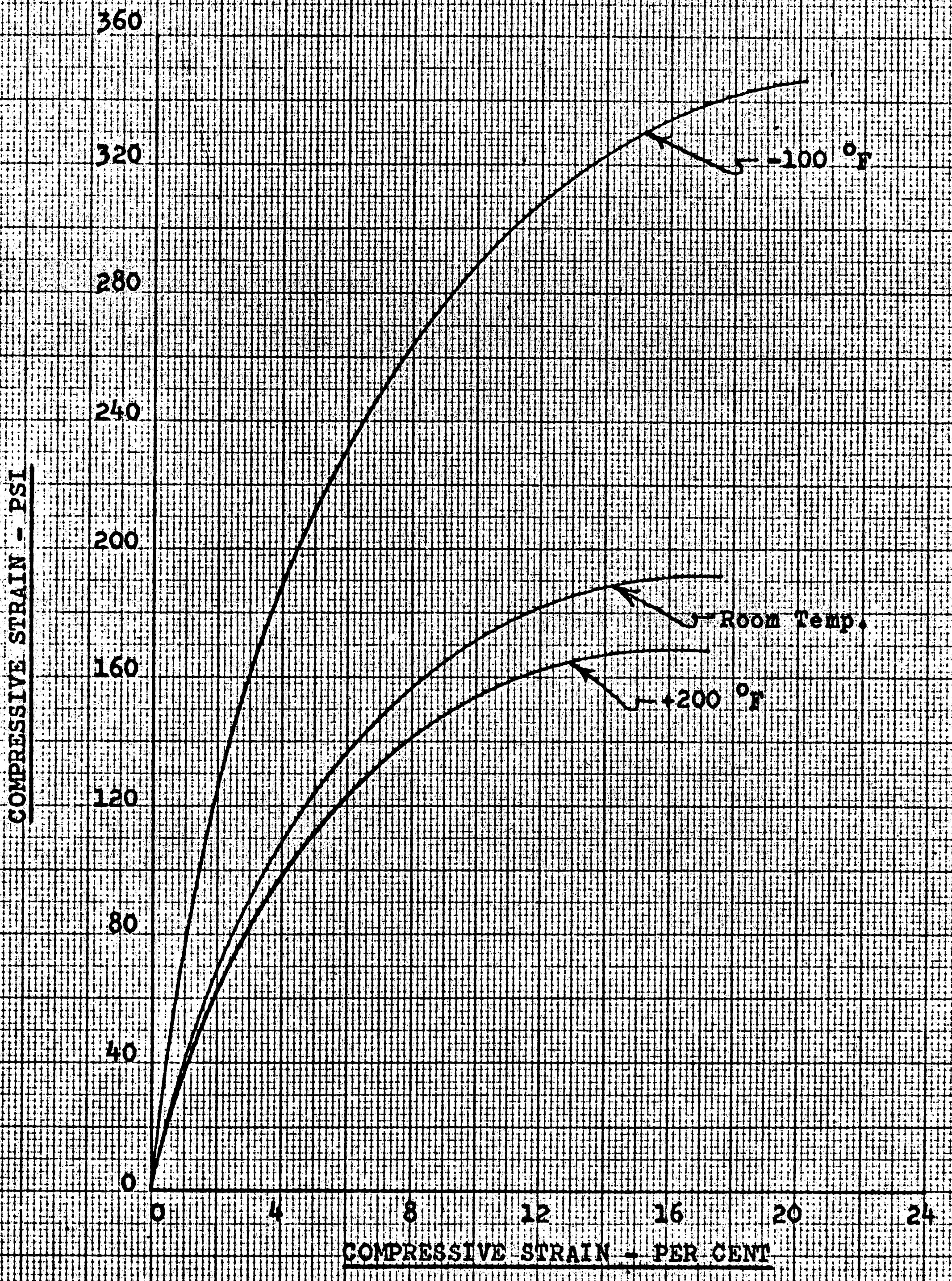

Compressive Properties of ESA 3560, Type IIA at Various Temperatures

FIG. III-19

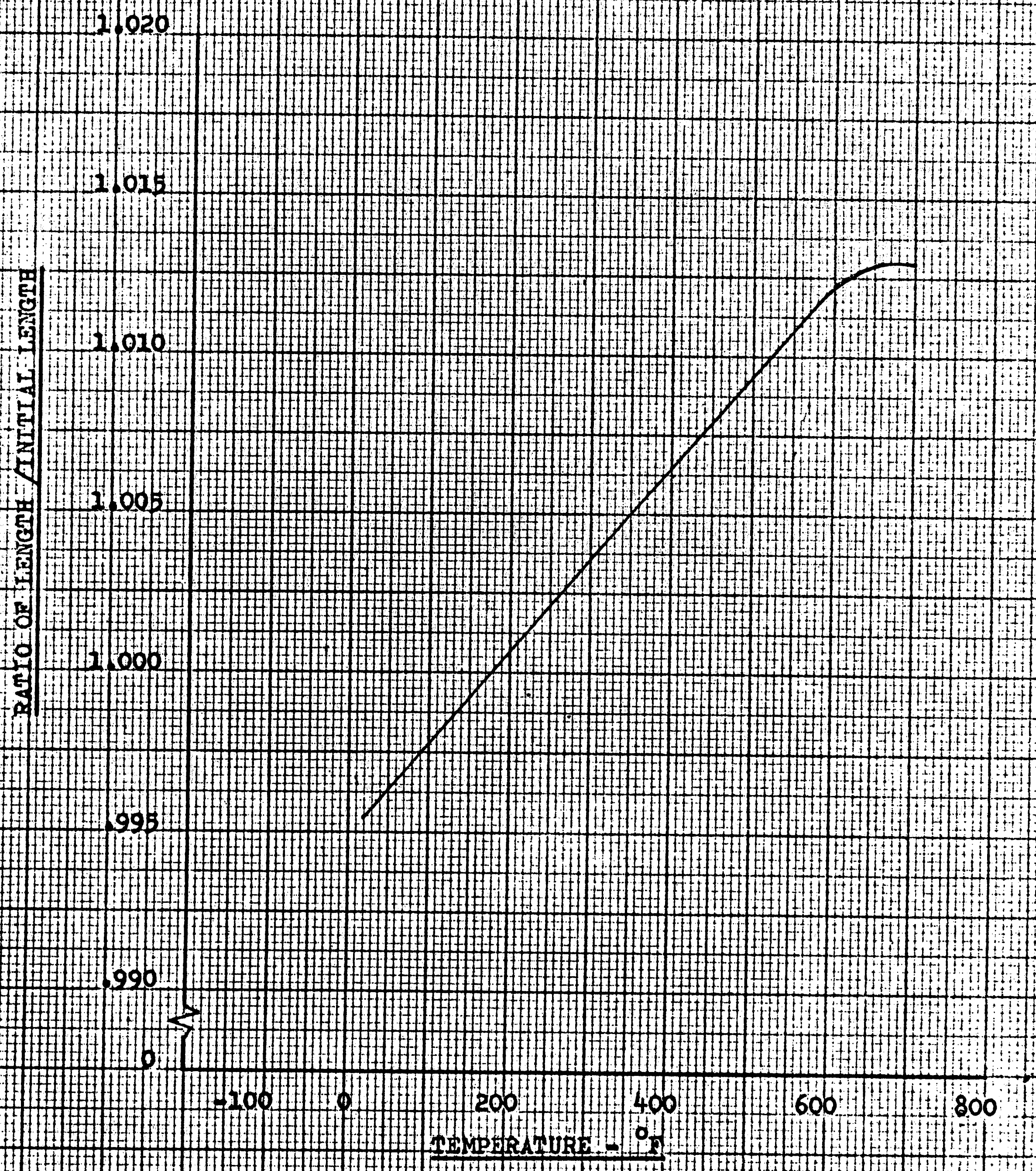

Linear Thermal Expansion of ESA 3560, Type IIA

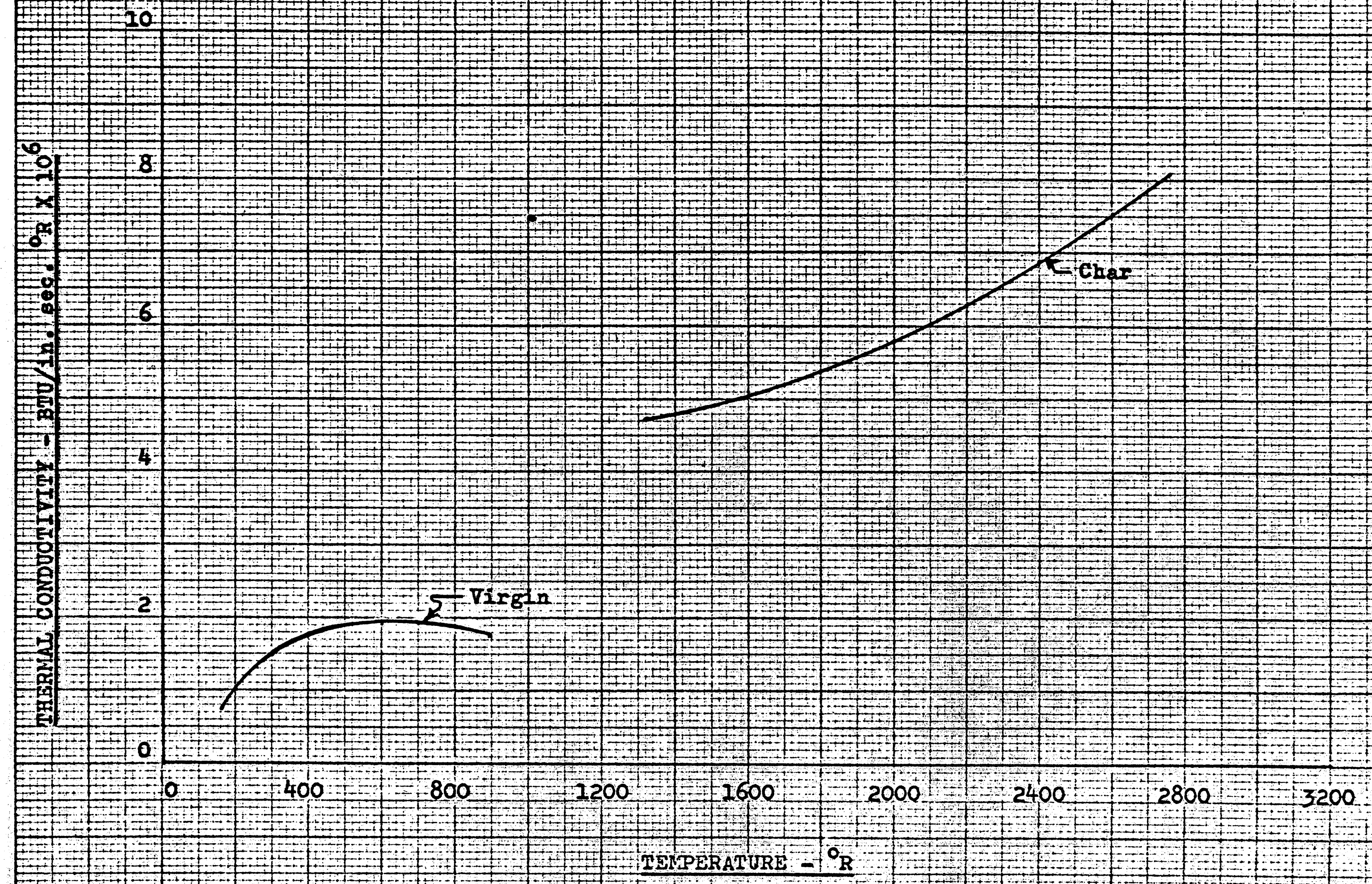

Fig. Thermal Conductivity vs Temperature - ESA 3560, Type IIA, Leading Edge Material

FIG. III-20

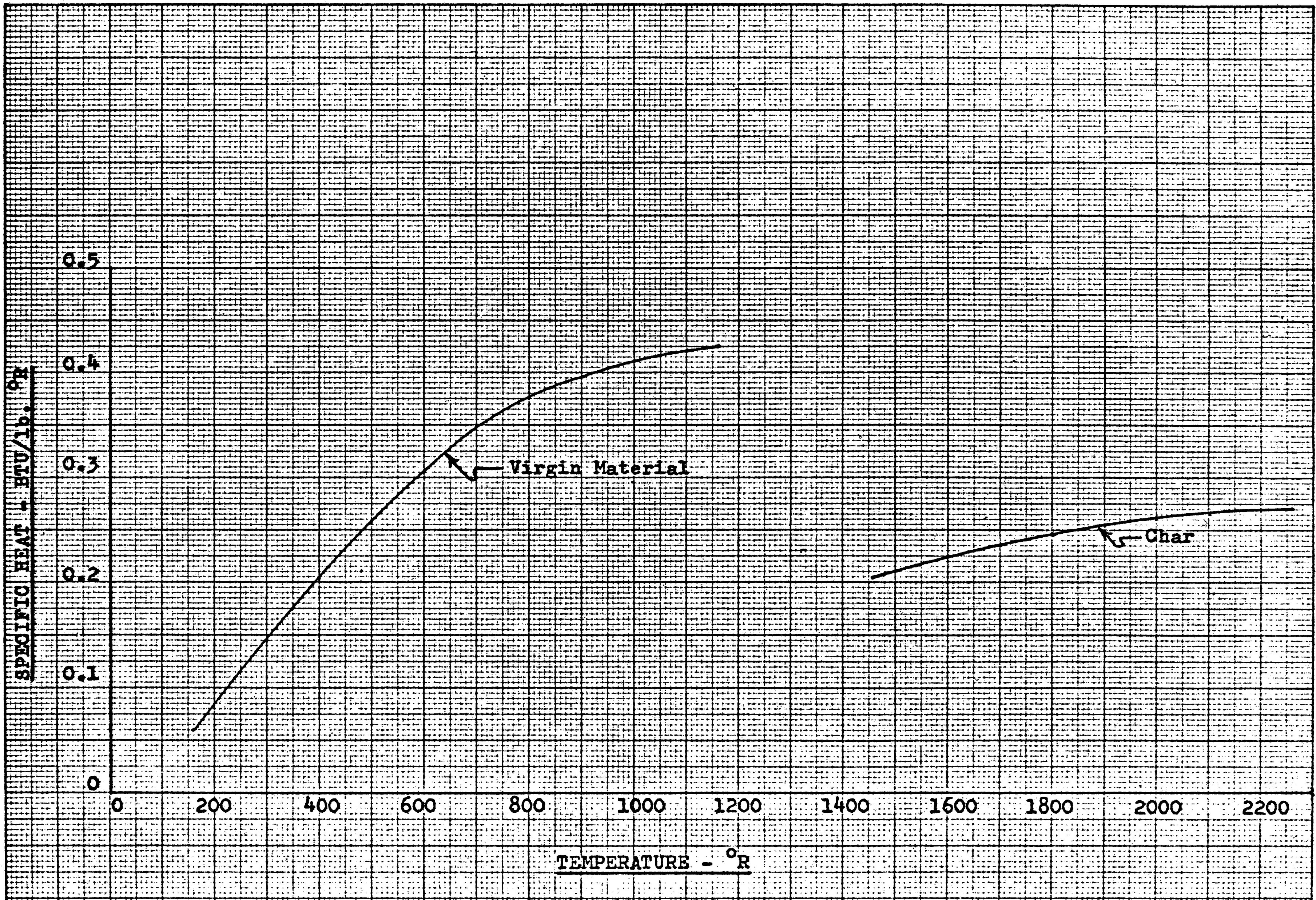

Fig. Specific Heat vs Temperature - ESA 3560, Type IIA, Leading Edge Material

FIG. III-21

SPECTRAL REFLECTANCE

DATE:

SAMPLE NO: 260

DESCRIPTION: AS MOLDED SURFACE OF ESA 3560, Type IIA

α_s :

ϵ :

α_s/ϵ :

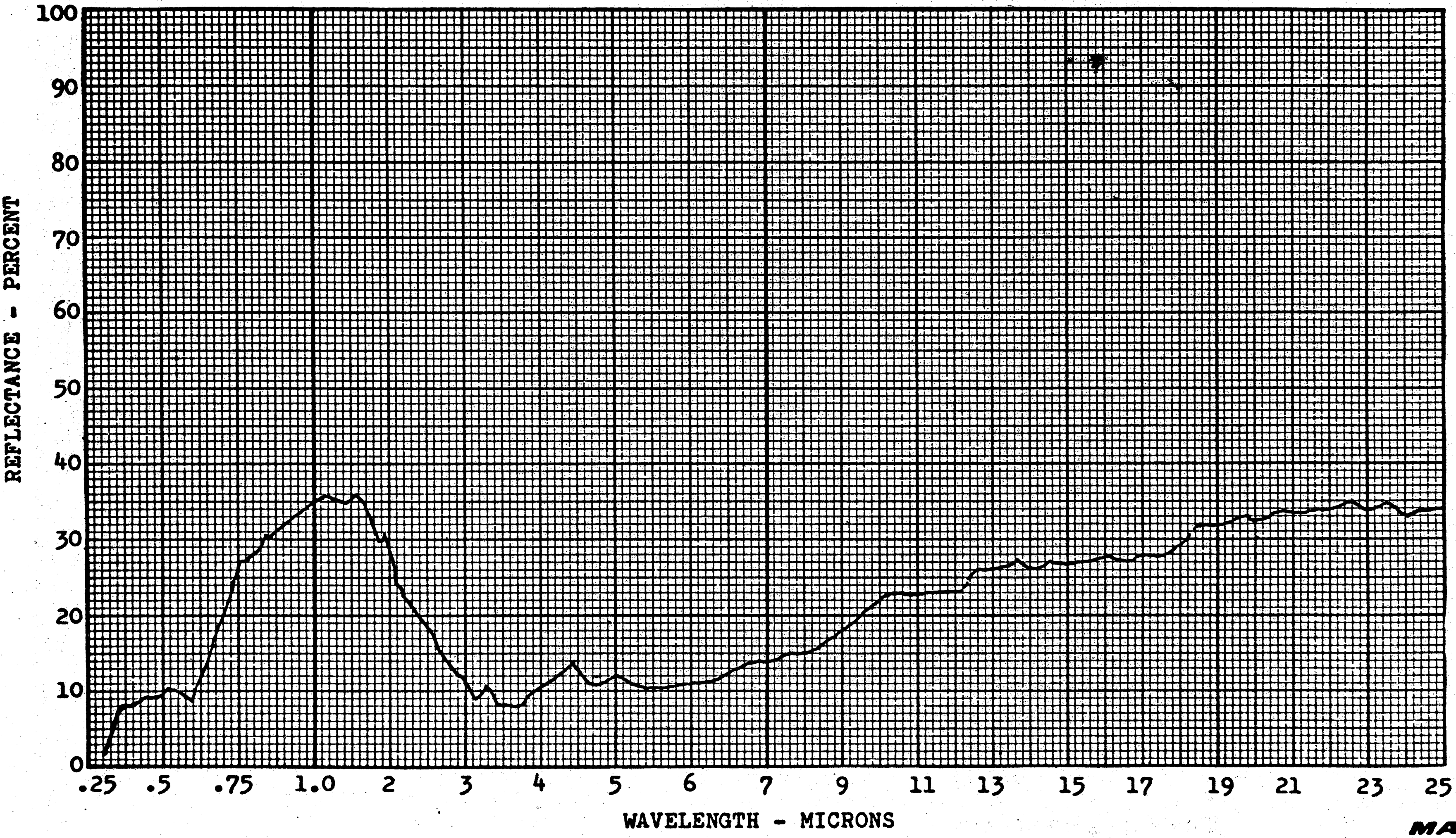

FIG. III-22

MARTIN MARIETTA

S P E C T R A L   R E F L E C T A N C E

DATE:

SAMPLE NO: 264

DESCRIPTION: CHAR SURFACE OF ESA 3560, Type IIA

α_s :

ϵ :

α_s/ϵ :

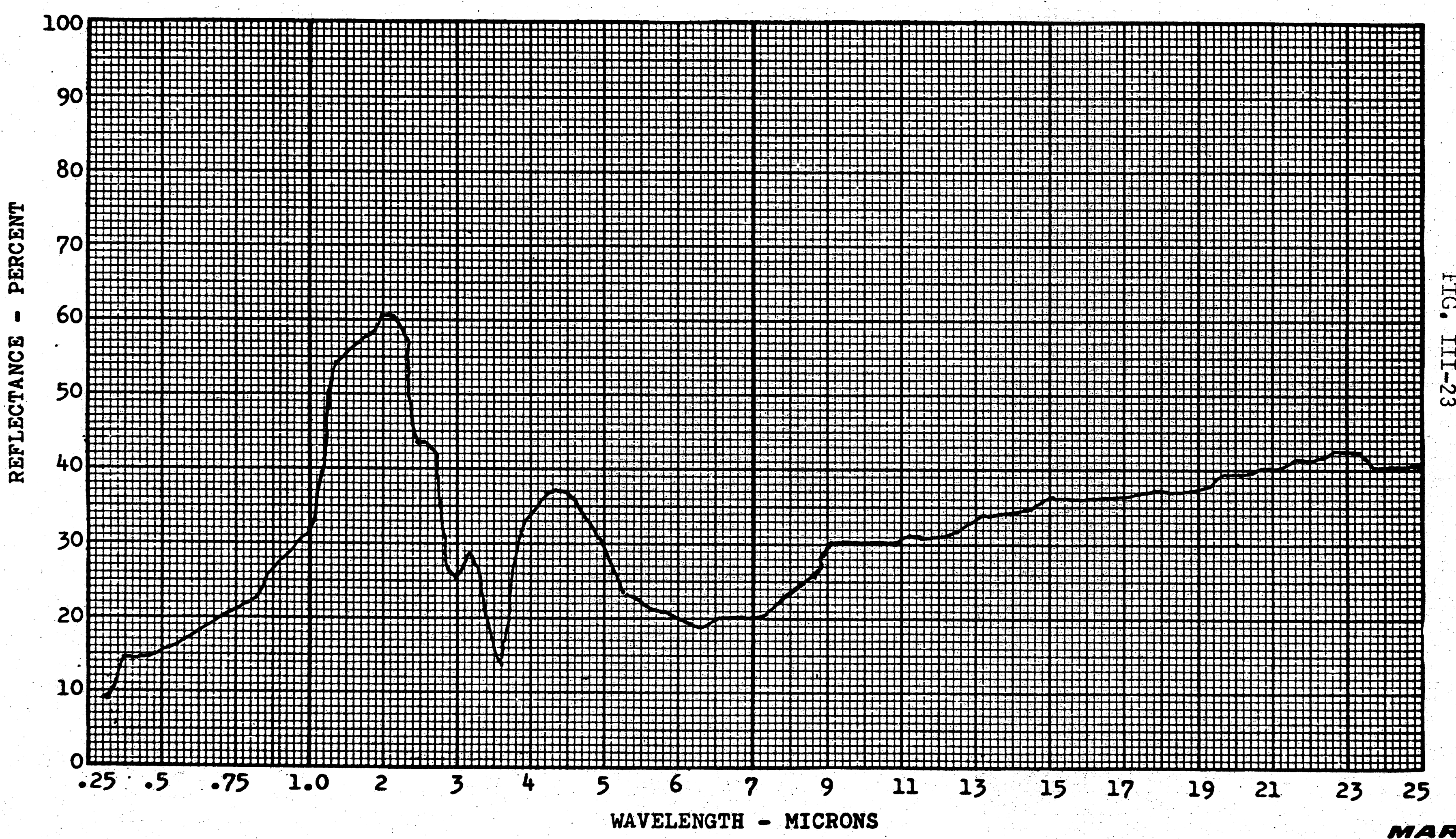

FIG. III-23

MARTIN MARIETTA

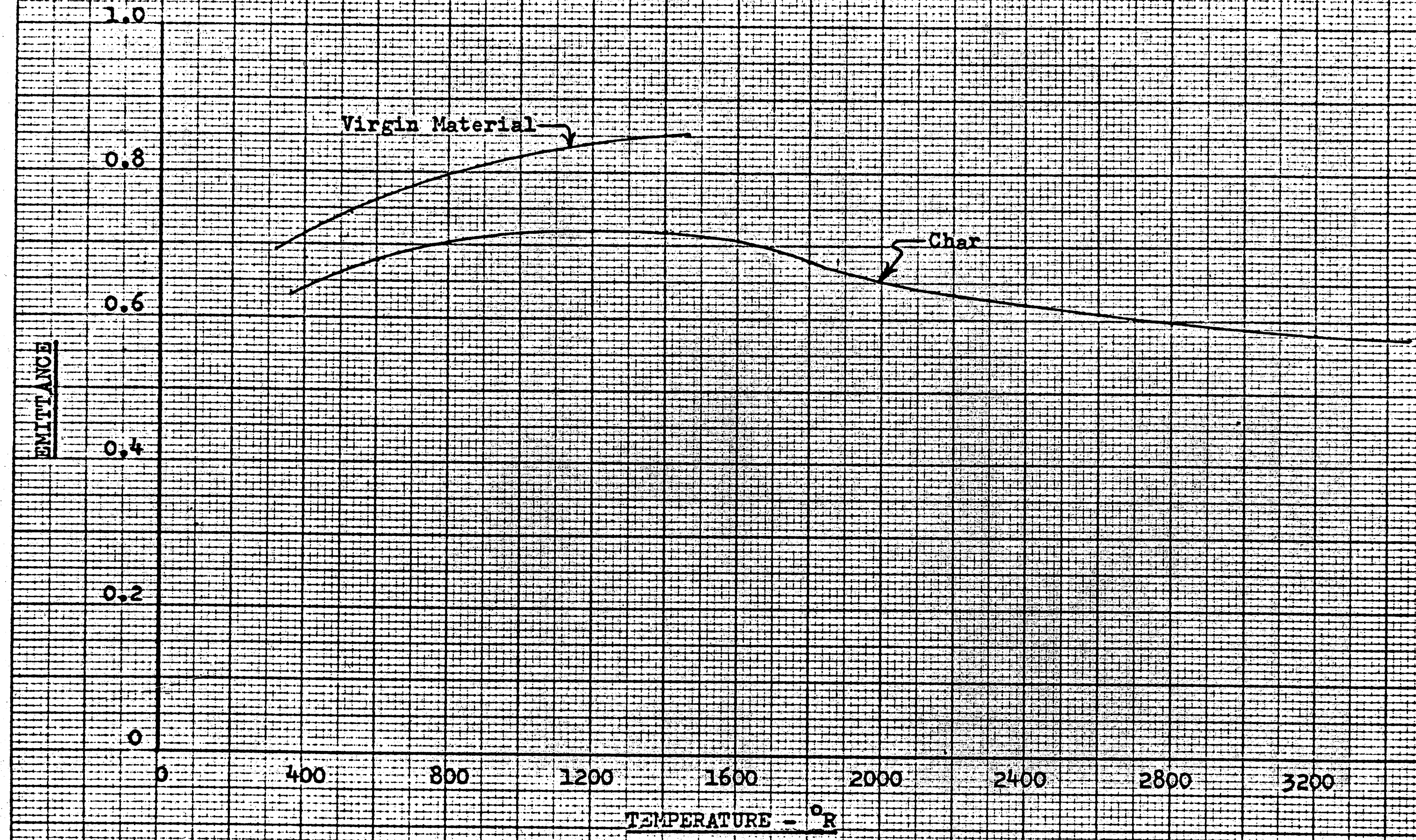

Fig. Emittance vs Temperature - ESA 3560, Type IIA, Leading Edge Material

FIG. III-24

FIG. III-25

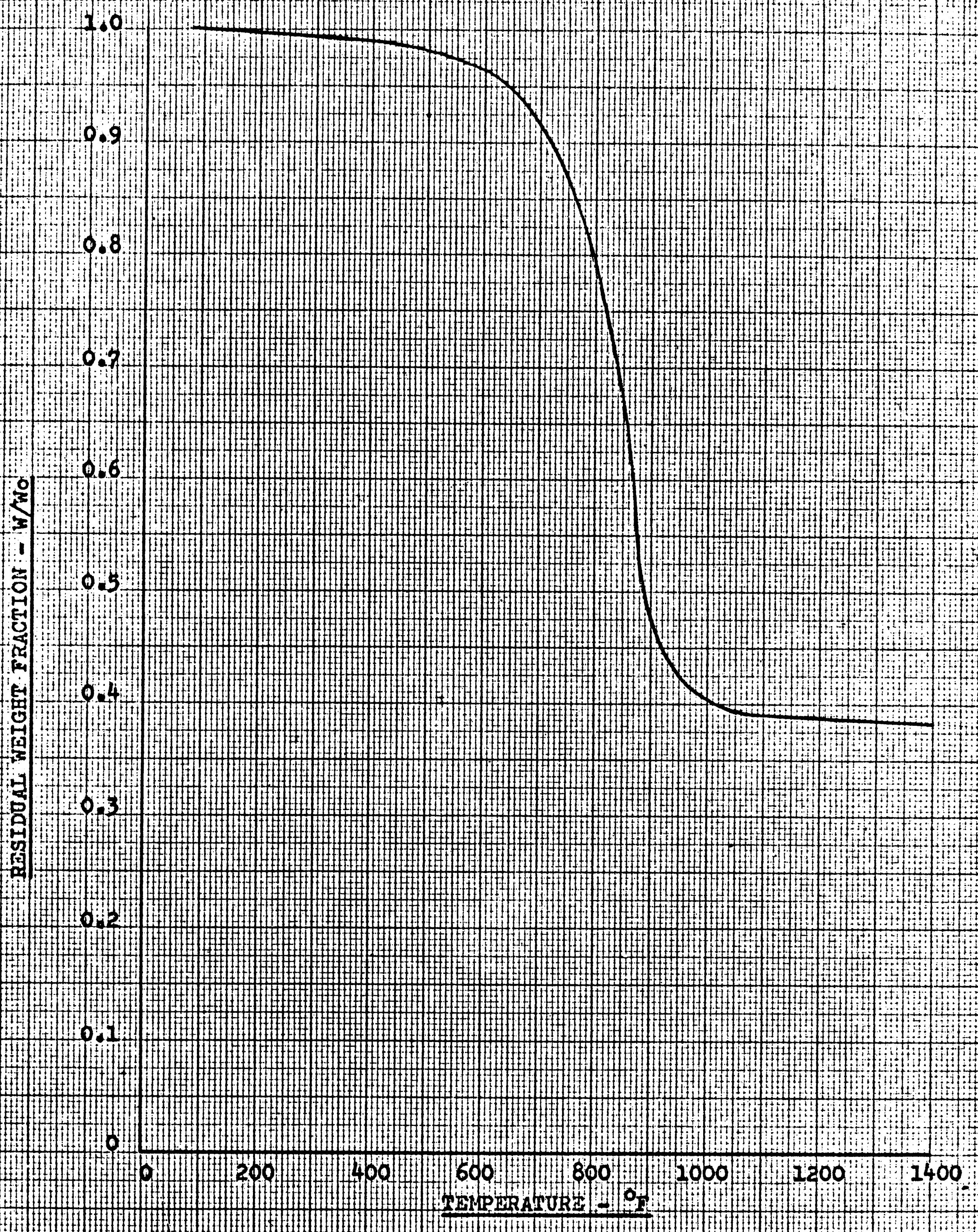

Typical TGA Thermograms for ESA 3560, TYPEIIA, LEADING EDGE MAT.

SAMPLE: ESA-3560, Type IIA

ORIGIN:

SIZE 850° Micro

REF. Al_2O_3

PROGRAM MODE Heat

RATE 12 °C/MIN., **START** 25 °C

ATM. He 2SCFH

	T	△ T
SCALE SETTING	100 °C/IN.	0.2 °C/IN.

Weight = 71.290 Mgs

Residue = 26.515 Mgs

RUN NO.

DATE

OPERATOR

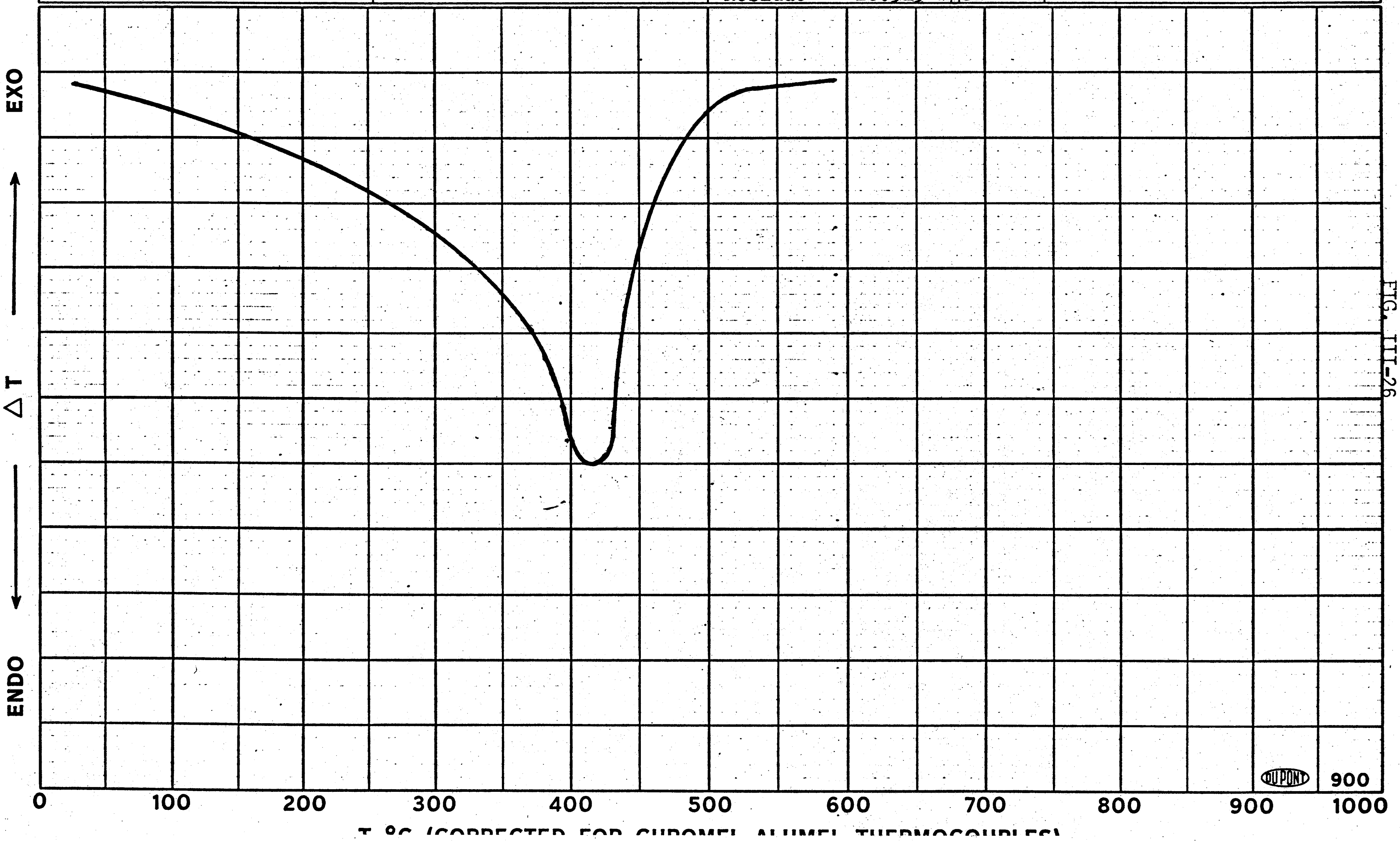

FIG. III-26

FIG. III-27

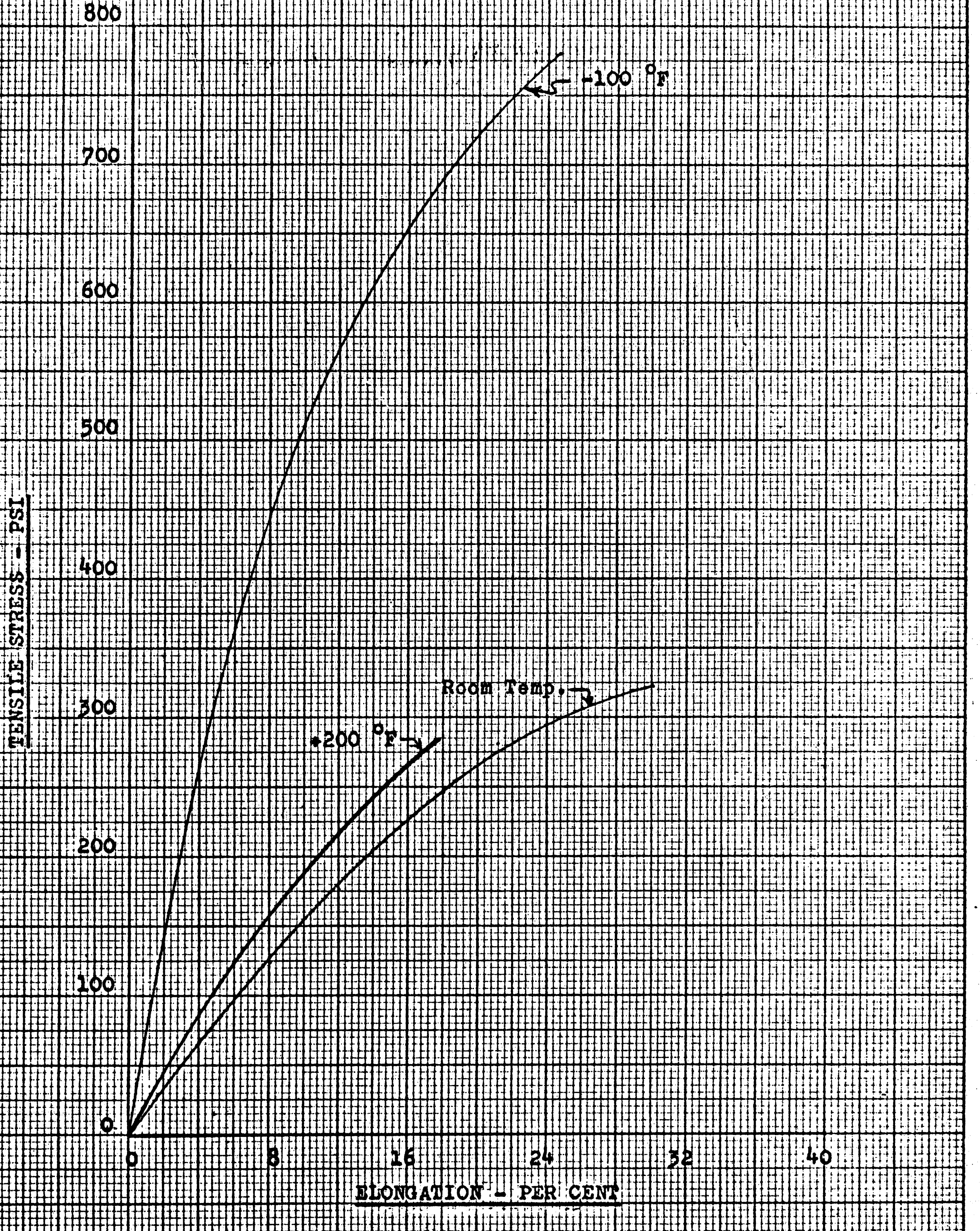

Fig. 5. Tensile Properties vs Temperature-DC93-027 Hard Point Material

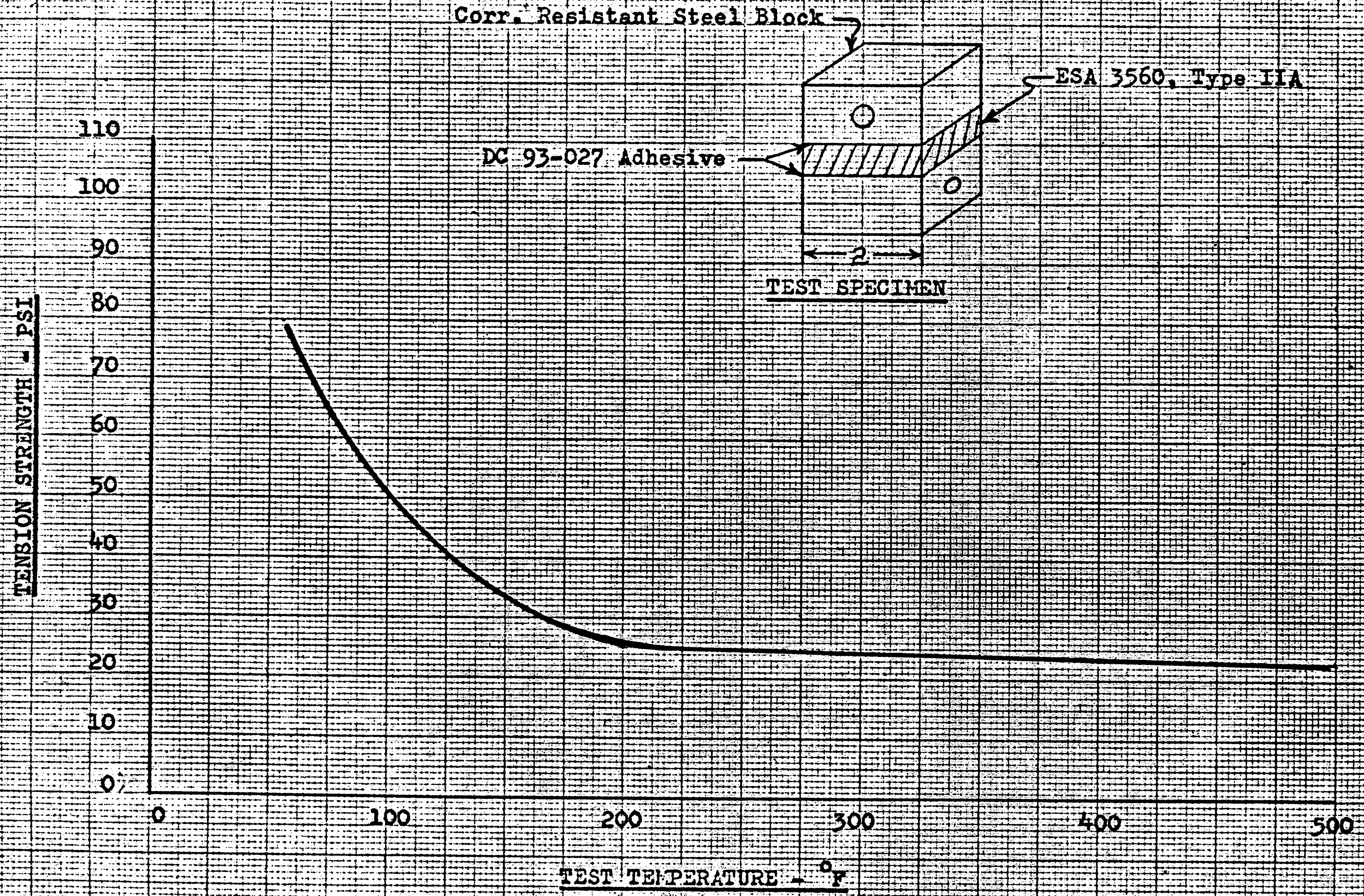

Bond Strength vs Temperature - ESA 3560, Type IIA, Bonded to Corr. Resist. Steel With DC93-027

FIG. III-28

FIG. III-29

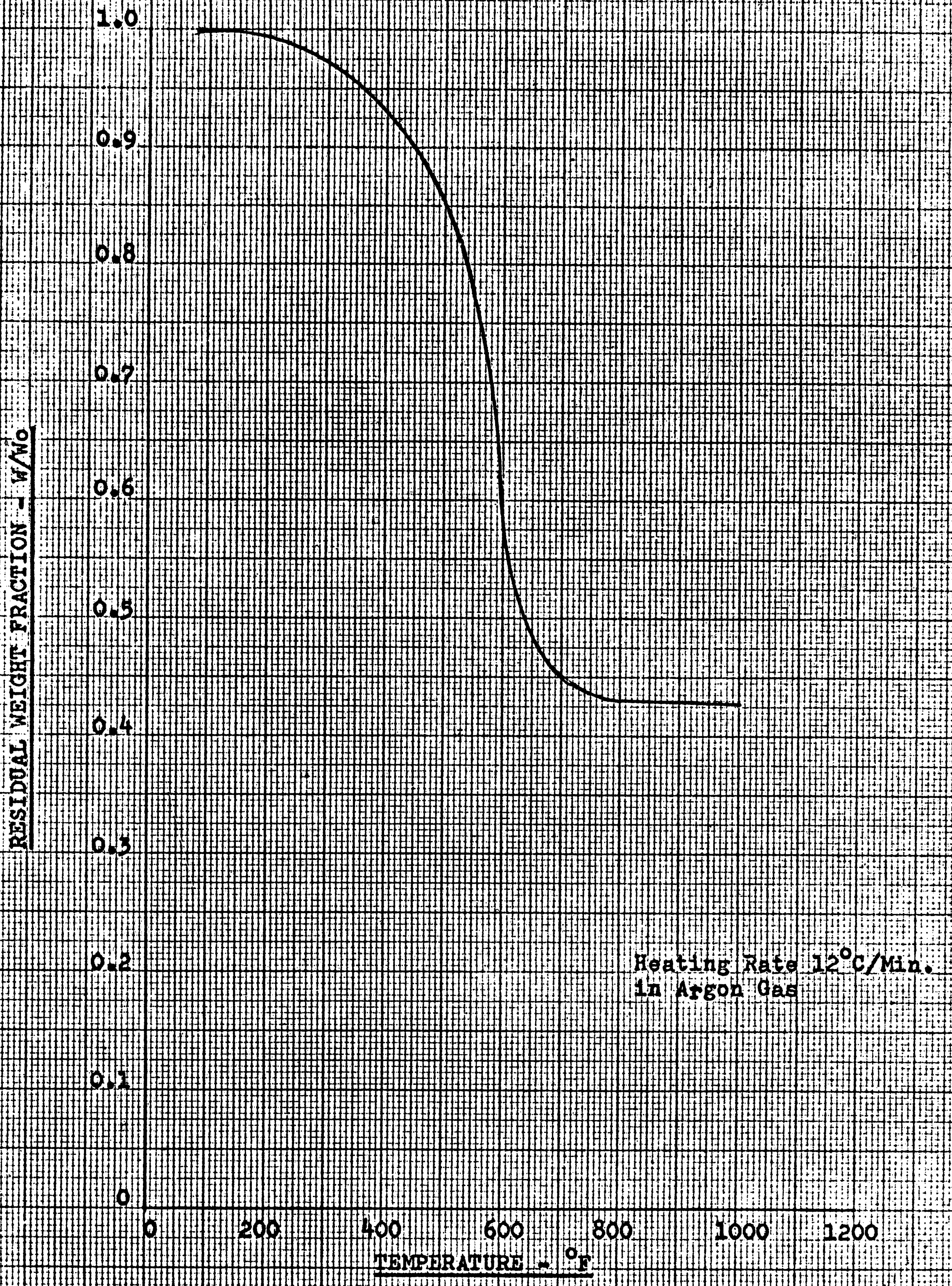

Typical Thermogram for DC93-027 Hard Point Material

SAMPLE: DC - 93 027

ORIGIN:

SIZE 850° Micro

REF. Al_2O_3

PROGRAM MODE Heat

RATE 6.0 °C/MIN.,**START** 25 °C

ATM. He 2SCFH

	T	△ T
SCALE SETTING	100 °C/IN.	0.2 °C/IN.

Weight = 47.490 Mgs

Residue = 16.295 Mgs

RUN NO.

DATE

OPERATOR

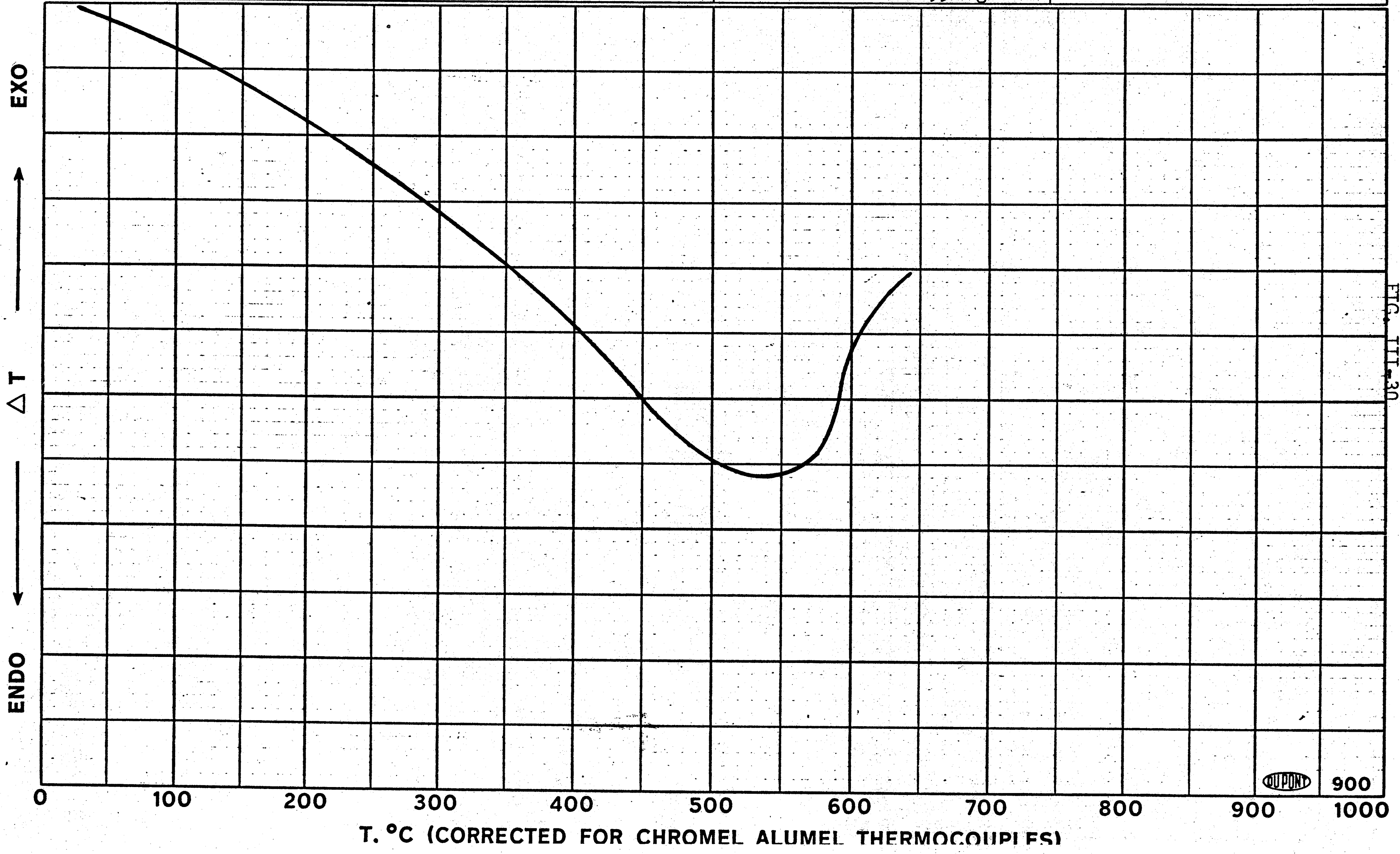

FIG. III-30

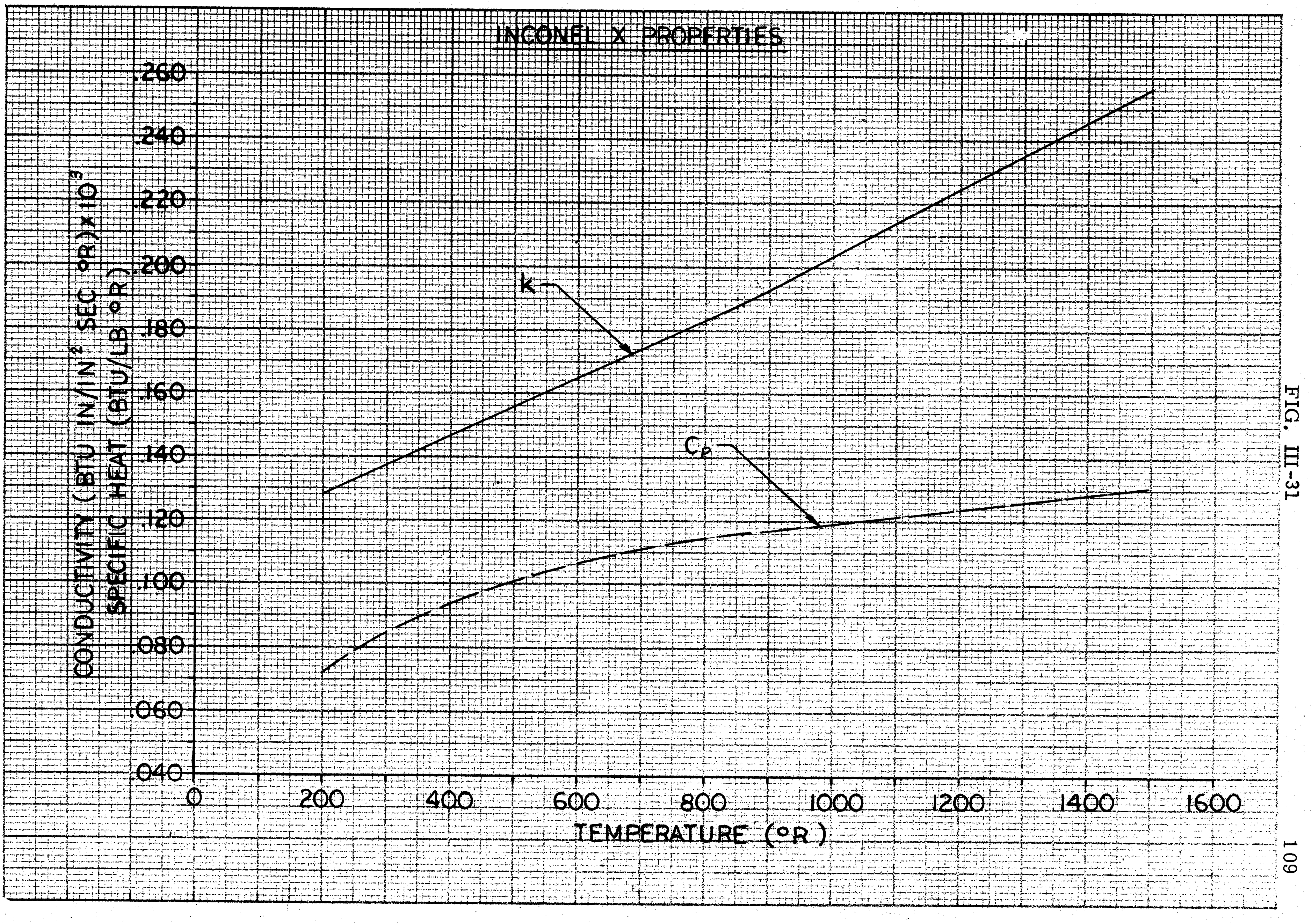
INCONEL X PROPERTIES
CONDUCTIVITY (BTU IN/IN^2 SEC °R) x 10^3
SPECIFIC HEAT (BTU/LB °R)
.260
.240
.220
.200
.180
.160
.140
.120
.100
.080
.060
.040
0
200
400
600
800
1000
1200
1400
1600
TEMPERATURE (°R)
k
C_p

FIG. III-31

FIG. III-32

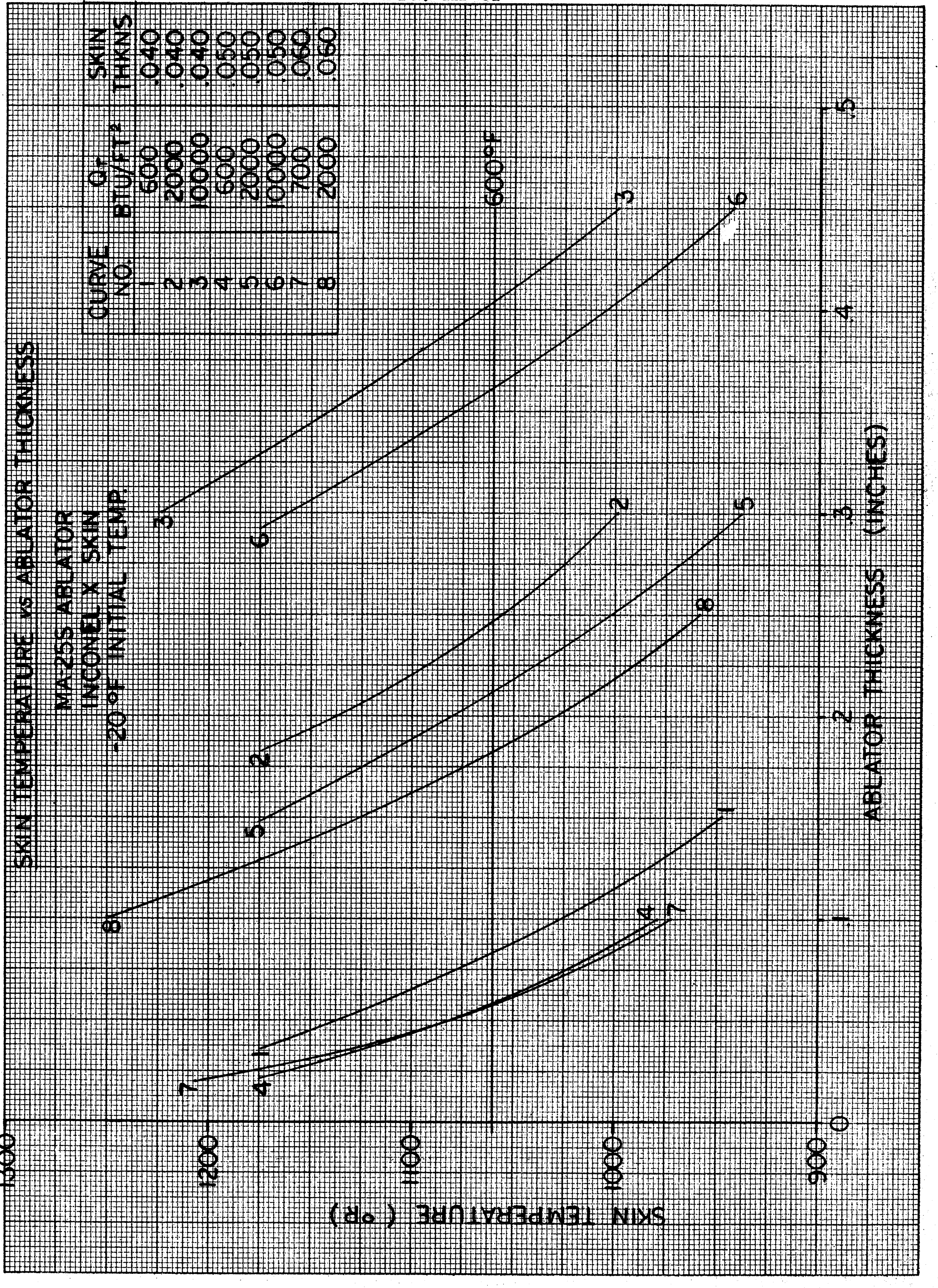
SKIN TEMPERATURE vs ABLATOR THICKNESS
MA-25S ABLATOR
INCONEL X SKIN
-20°F INITIAL TEMP.
CURVE NO.
Q_r BTU/FT²
SKIN THKNS
1 600 .040
2 2000 .040
3 10000 .040
4 600 .050
5 2000 .050
6 10000 .050
7 700 .060
8 2000 .060
600°F
1
2
3
4
5
6
7
8
1300
1200
1100
1000
900
SKIN TEMPERATURE (°R)
0
1
2
3
4
5
ABLATOR THICKNESS (INCHES)

FIG. III-33

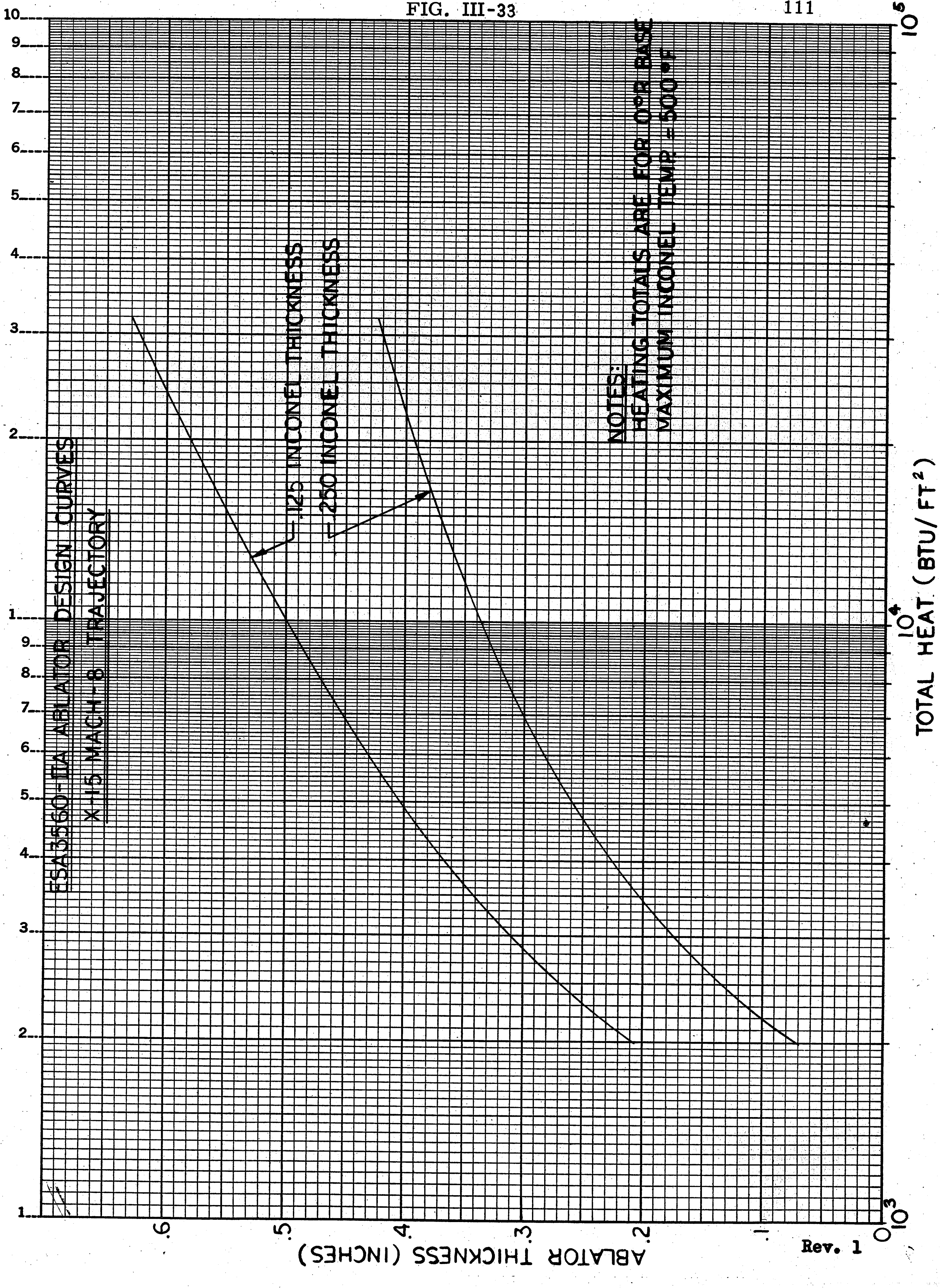

Rev. 1

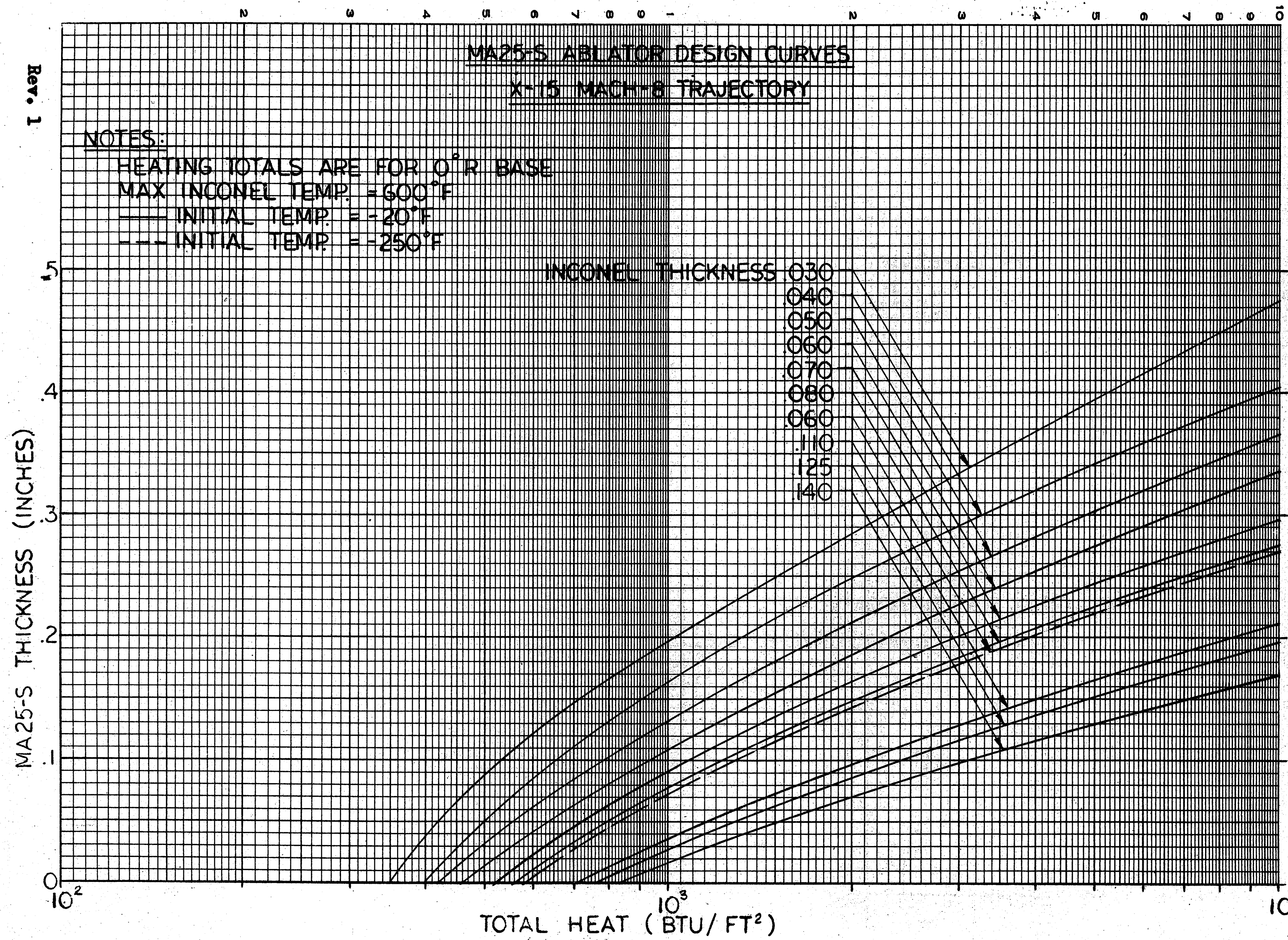

MA25-S ABLATOR DESIGN CURVES

X-15 MACH-8 TRAJECTORY

FIG. III-34

Rev. 1

TABLE III-2
LEADING EDGE DESIGN DATA

Section	Stagnation Total Heating Btu/ft^2		Skin Radius inches	Ablator Radius inches	Design Total Heating Btu/ft^2	
	Mach 8.0	Mach 7.4			Mach 8.0	Mach 7.4
Wing	32800	19870	.38	.80	22500	13700
Hor Stabil.						
Root	21800		.50	.90	16300	
Midspan	24900	14780	.38	.80	17100	10200
Tip	30800		.25	.70	18300	
Vert. Stabil.						
Fixed	31600	13360	.50	.78	25300	10650
Movable	30600		.50	.78	24400	
Canopy	15300	5450	.50	.70	13000	4600
Antenna						
Average	43250		.32	.67	30000	

FIGURE III-35

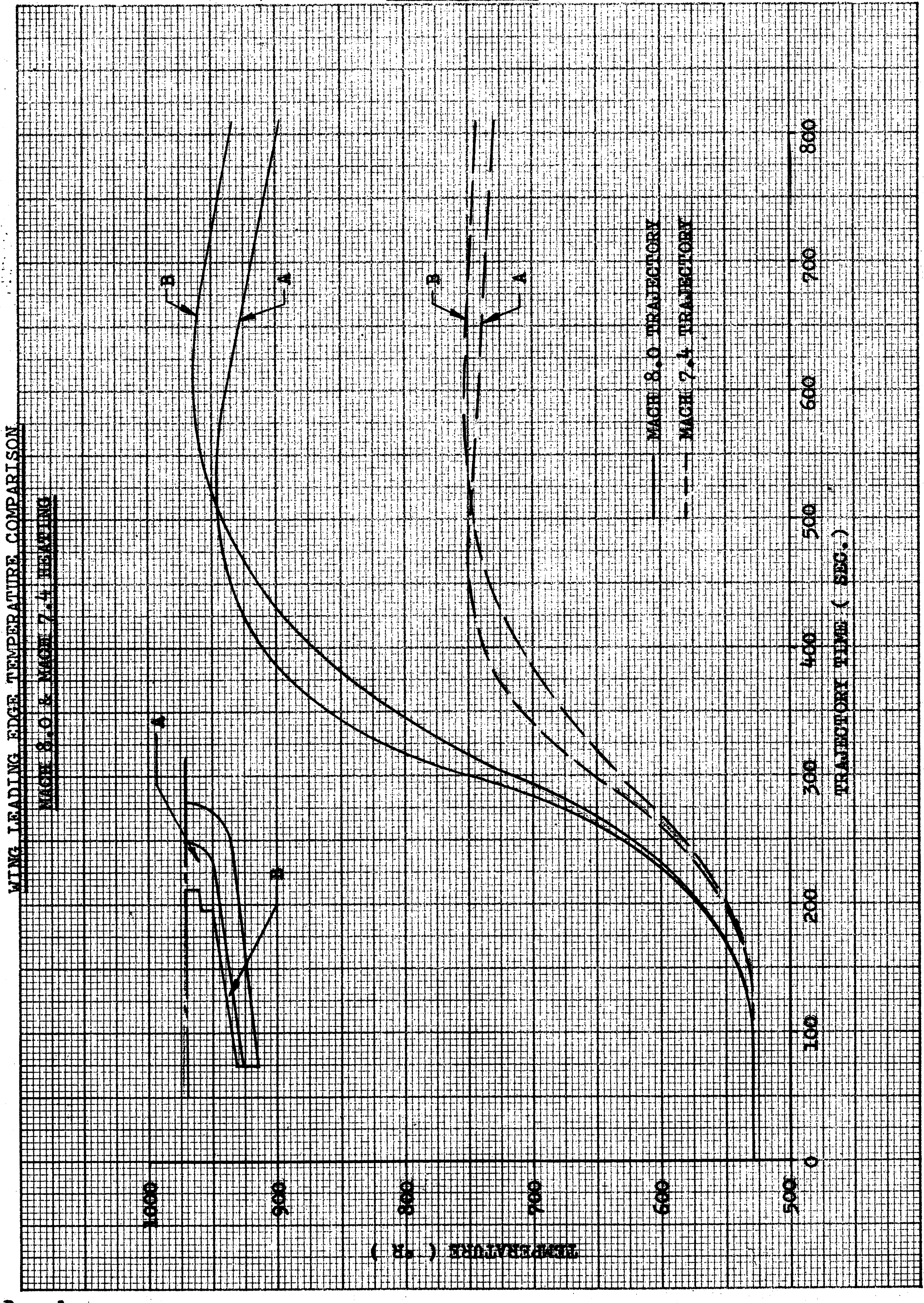

WING LEADING EDGE TEMPERATURE COMPARISON

MACH 8.0 & MACH 7.4 HEATING

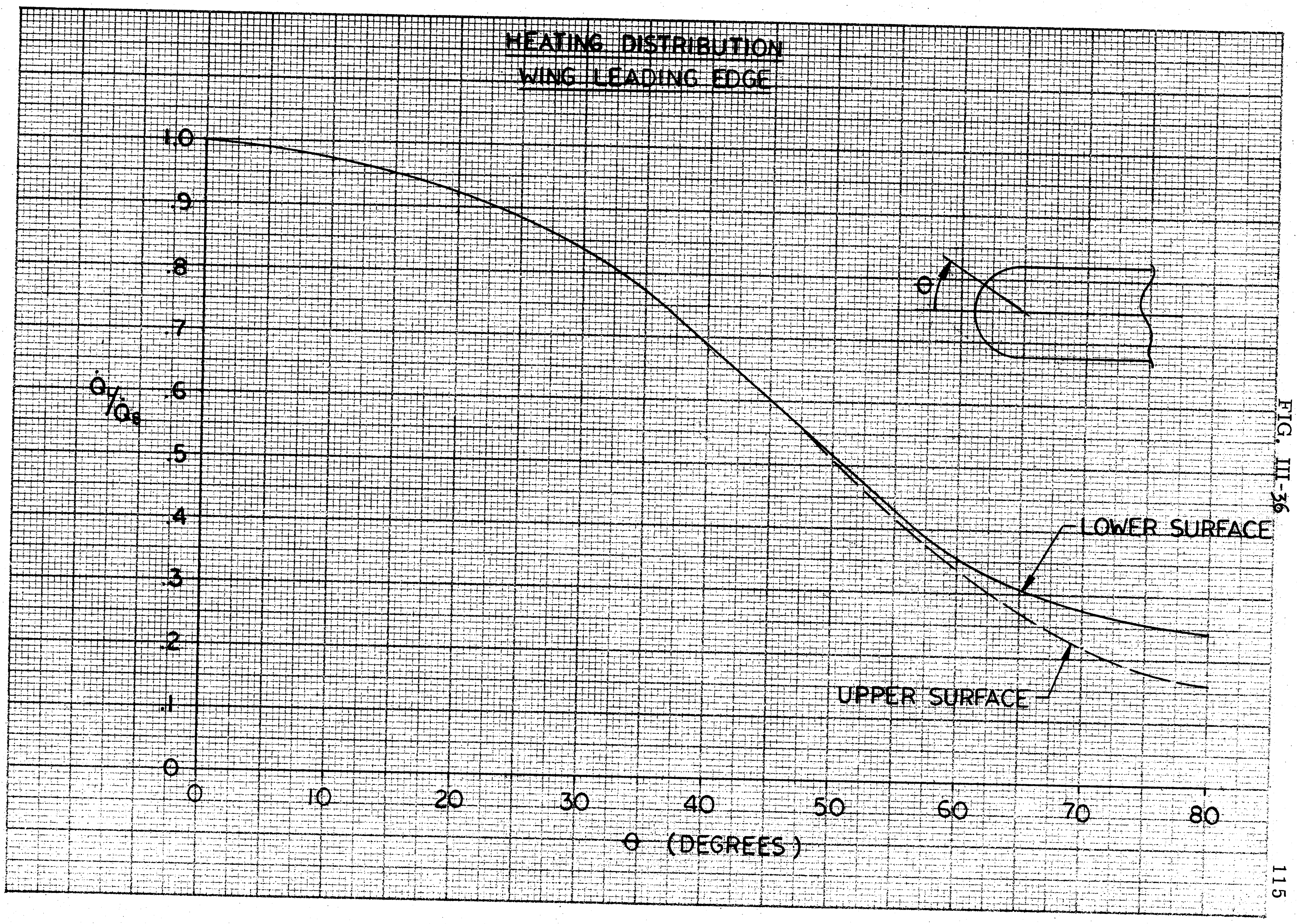
HEATING DISTRIBUTION
WING LEADING EDGE

FIG. III-36

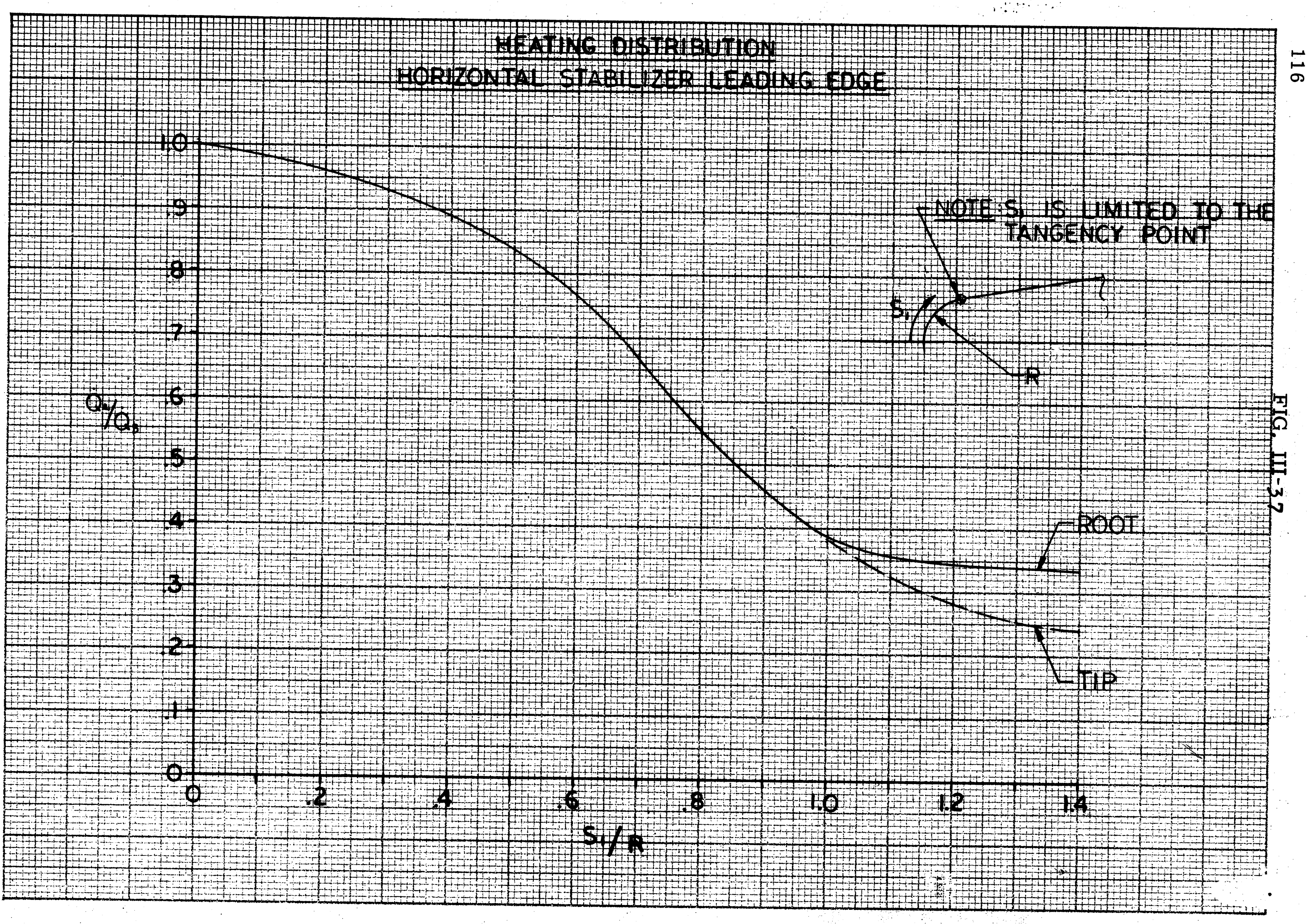

HEATING DISTRIBUTION
HORIZONTAL STABILIZER LEADING EDGE

FIG. III-37

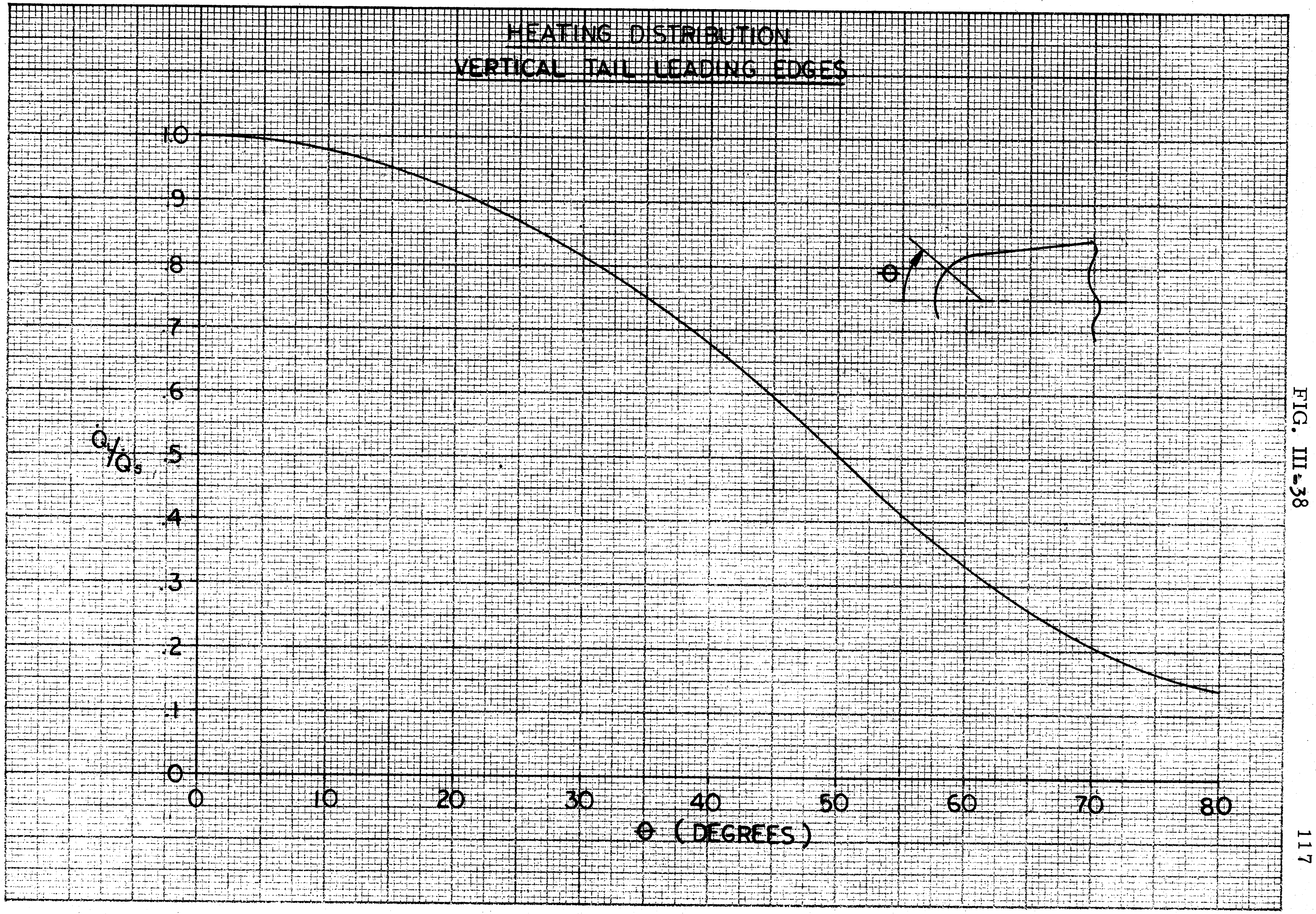

HEATING DISTRIBUTION
VERTICAL TAIL LEADING EDGES

FIG. III-38

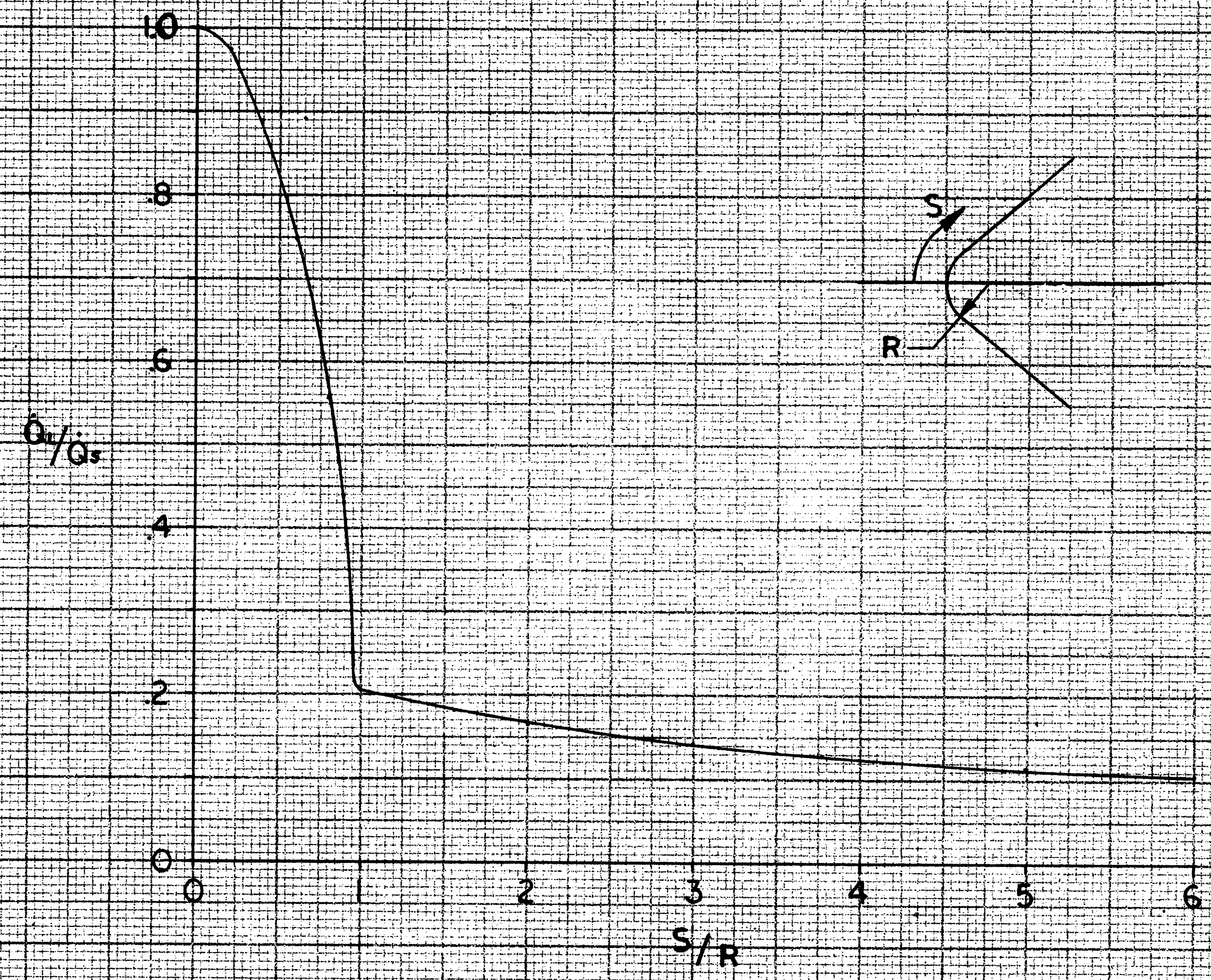

HEATING DISTRIBUTION
CANOPY LEADING EDGE
1.0
.8
.6
.4
.2
0
$\dot{Q}_u/\dot{Q}_s$
0
1
2
3
4
5
6
S/R
S
R

FIG. III-39

FIG. III-40

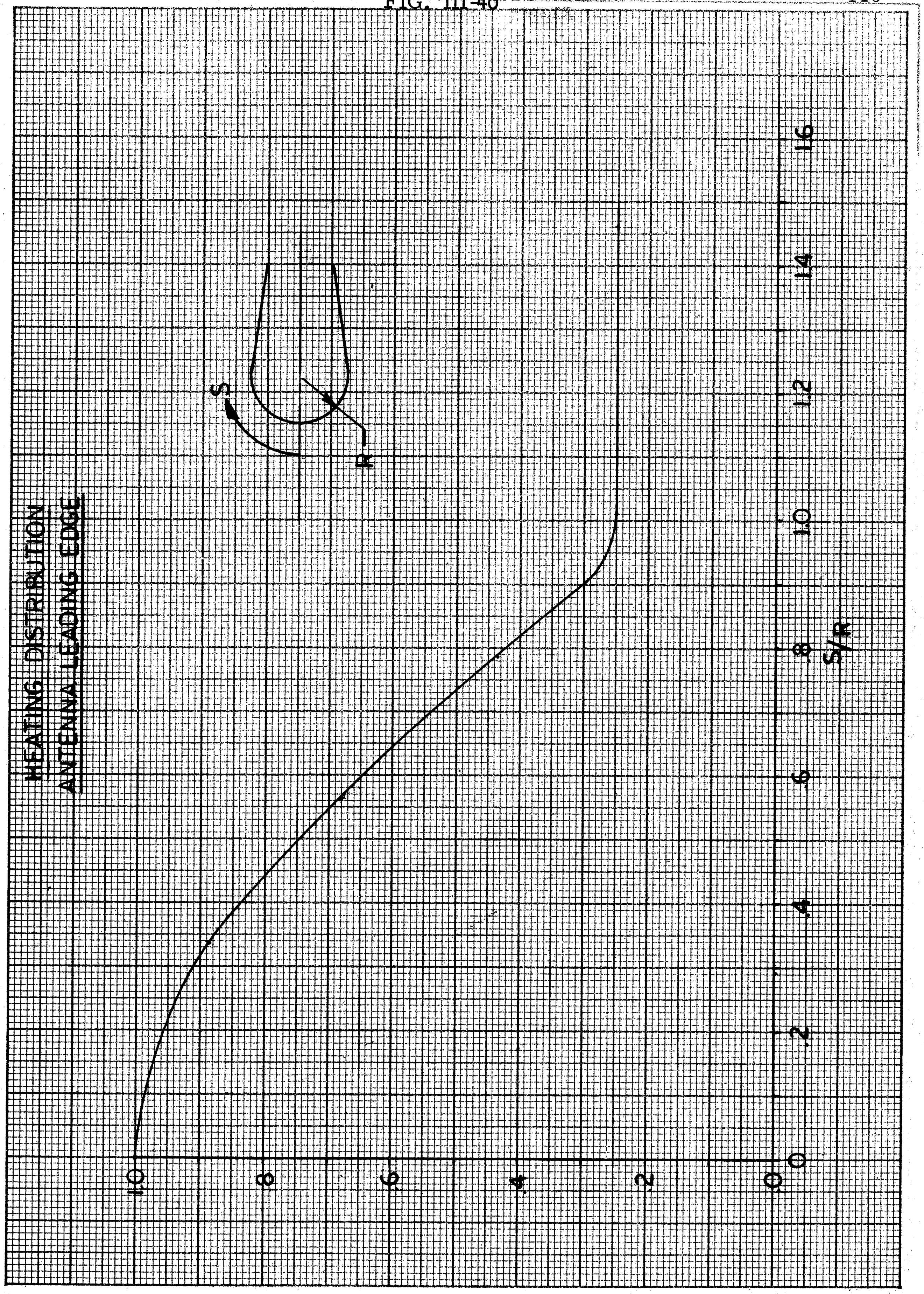

HEATING DISTRIBUTION
ANTENNA LEADING EDGE

FUSELAGE DATA POINTS

X-15 MACH 8 HEATING

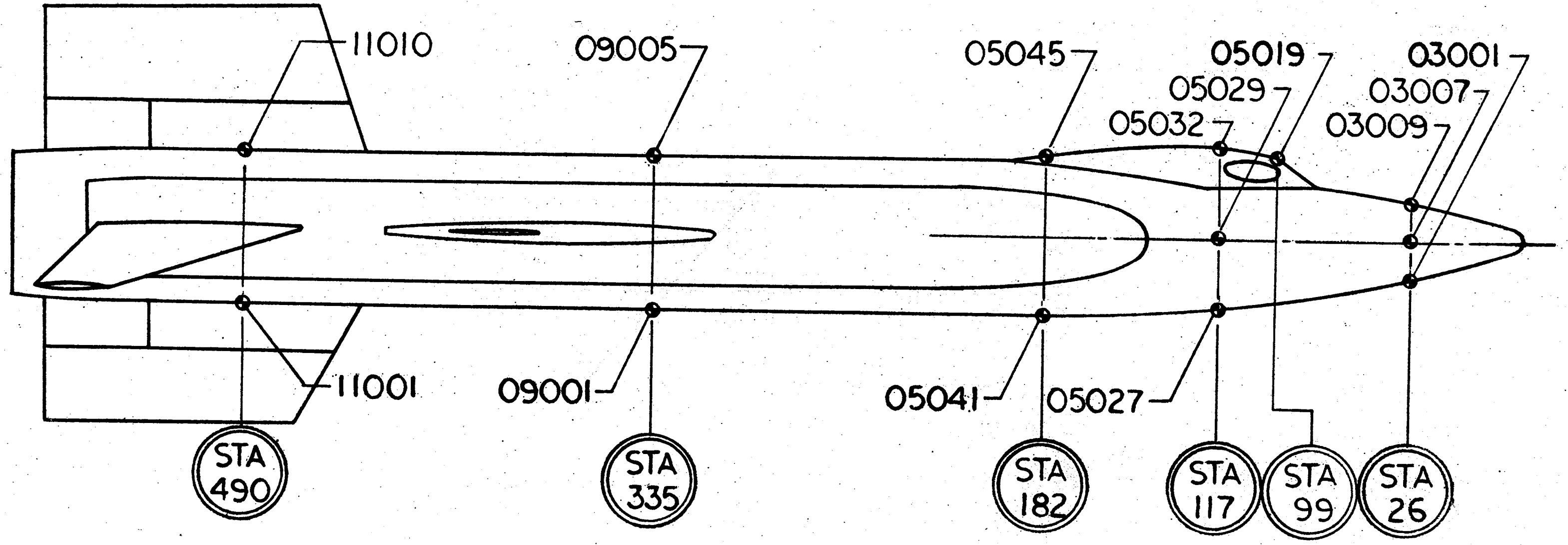

FIGURE III-41

FUSELAGE HEATING DISTRIBUTION

X-15A-2 MACH 7.4 TRAJECTORY

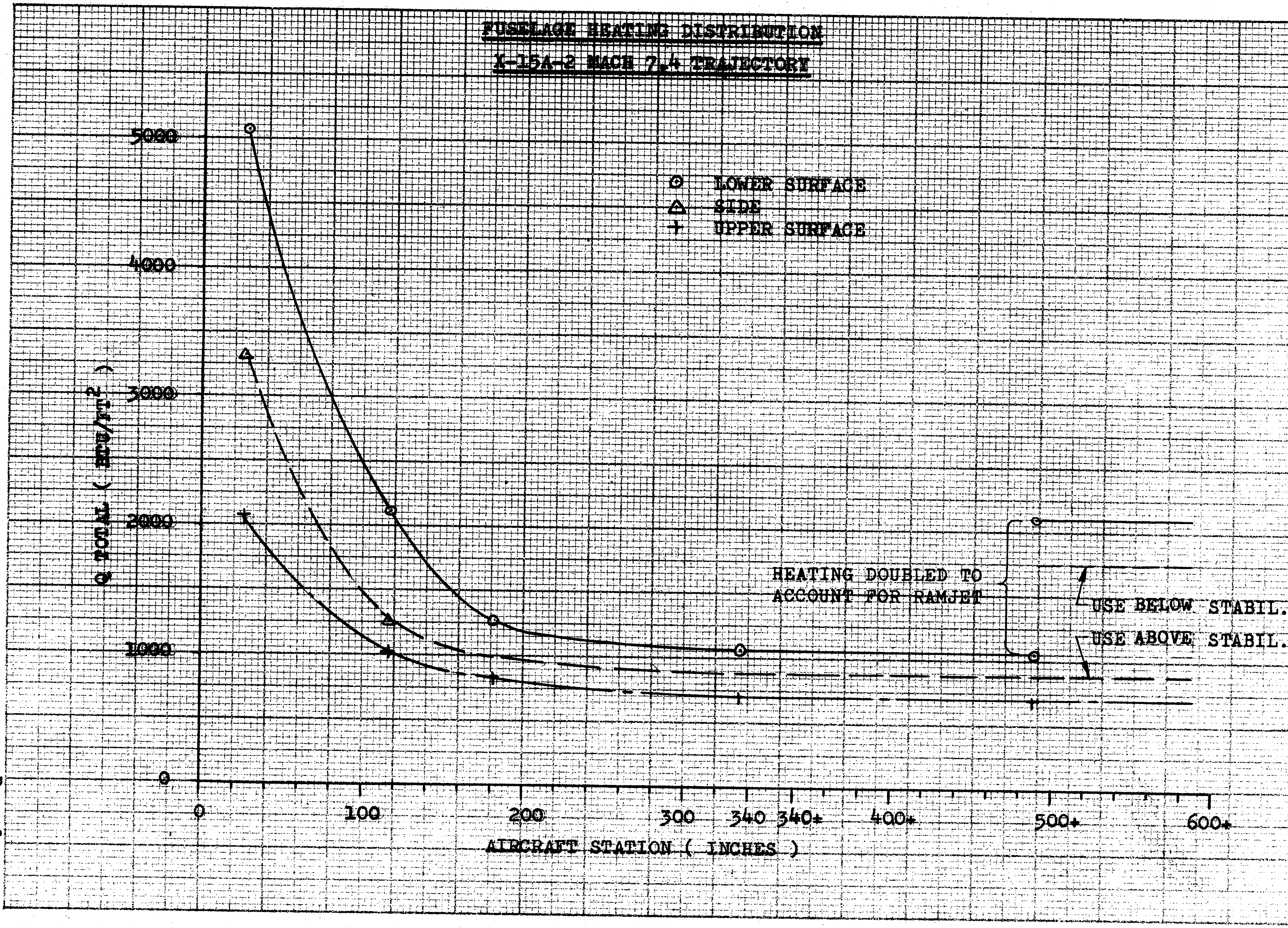

FIGURE III-42

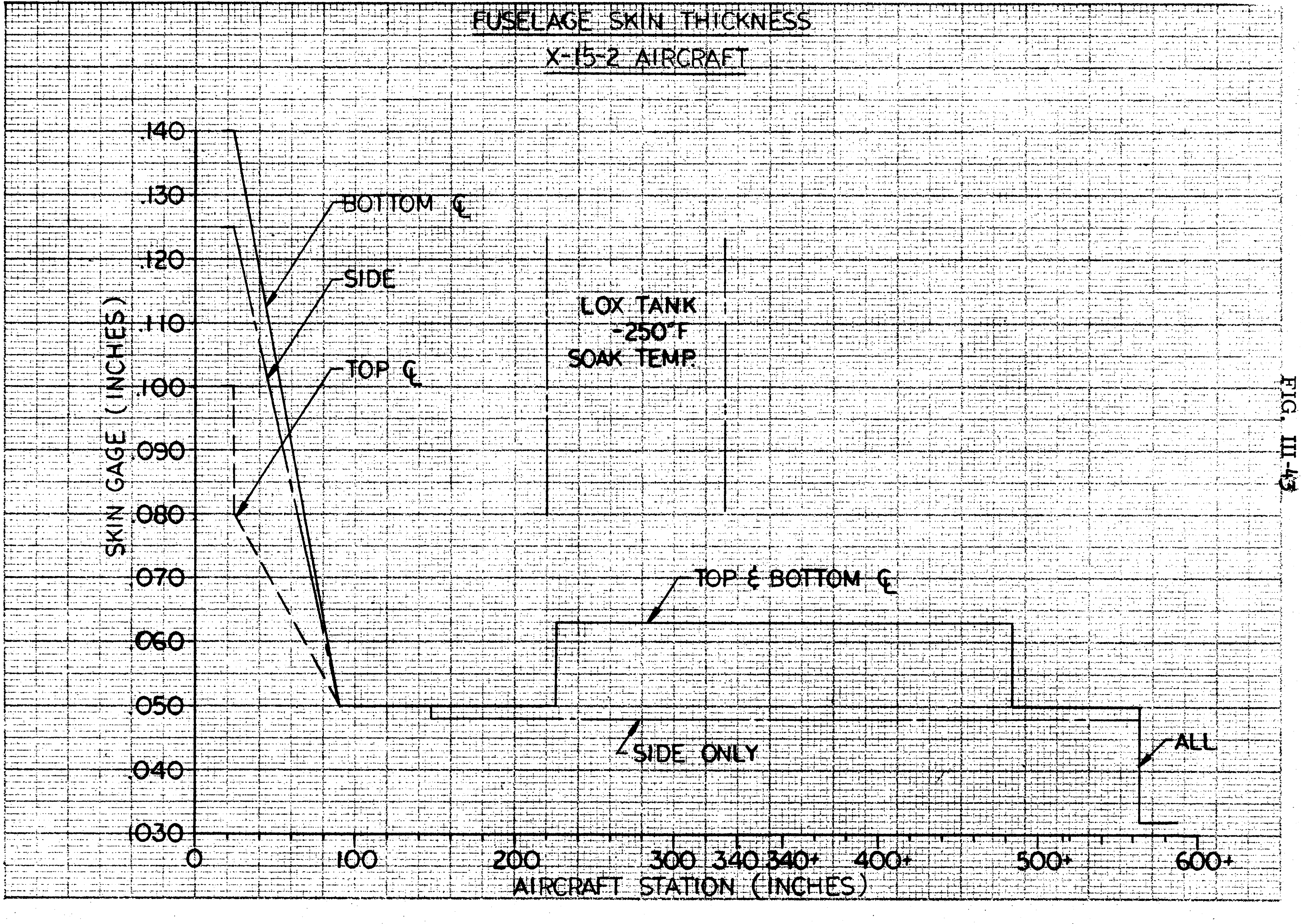

FUSELAGE SKIN THICKNESS
X-15-2 AIRCRAFT

FIG. III-43

FIG. III- 44

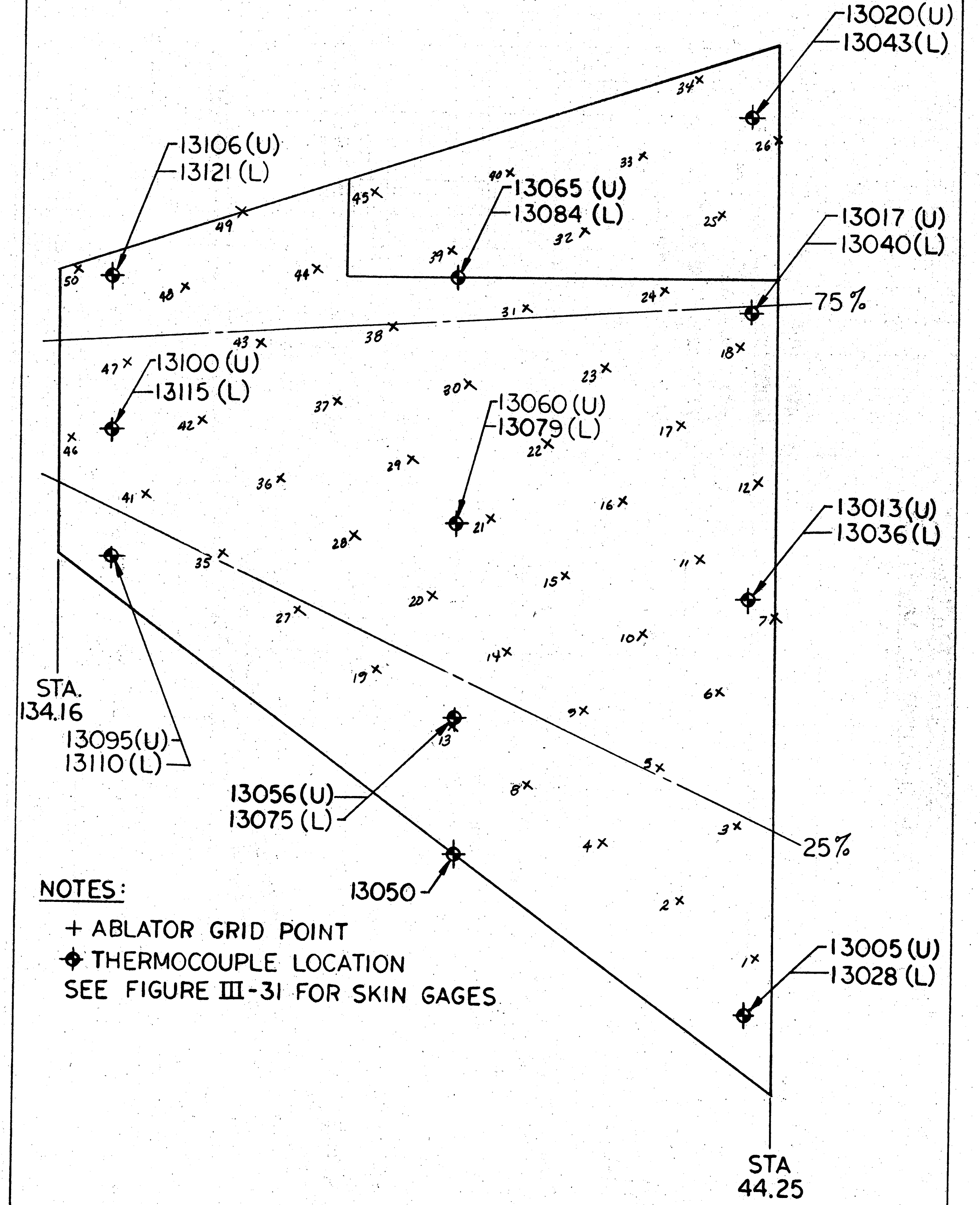

NOTES:

+ ABLATOR GRID POINT

⌖ THERMOCOUPLE LOCATION

SEE FIGURE III-31 FOR SKIN GAGES

WING DATA POINTS & ABLATOR GRID
X-15-2 T.P.S.

FIG. III-45

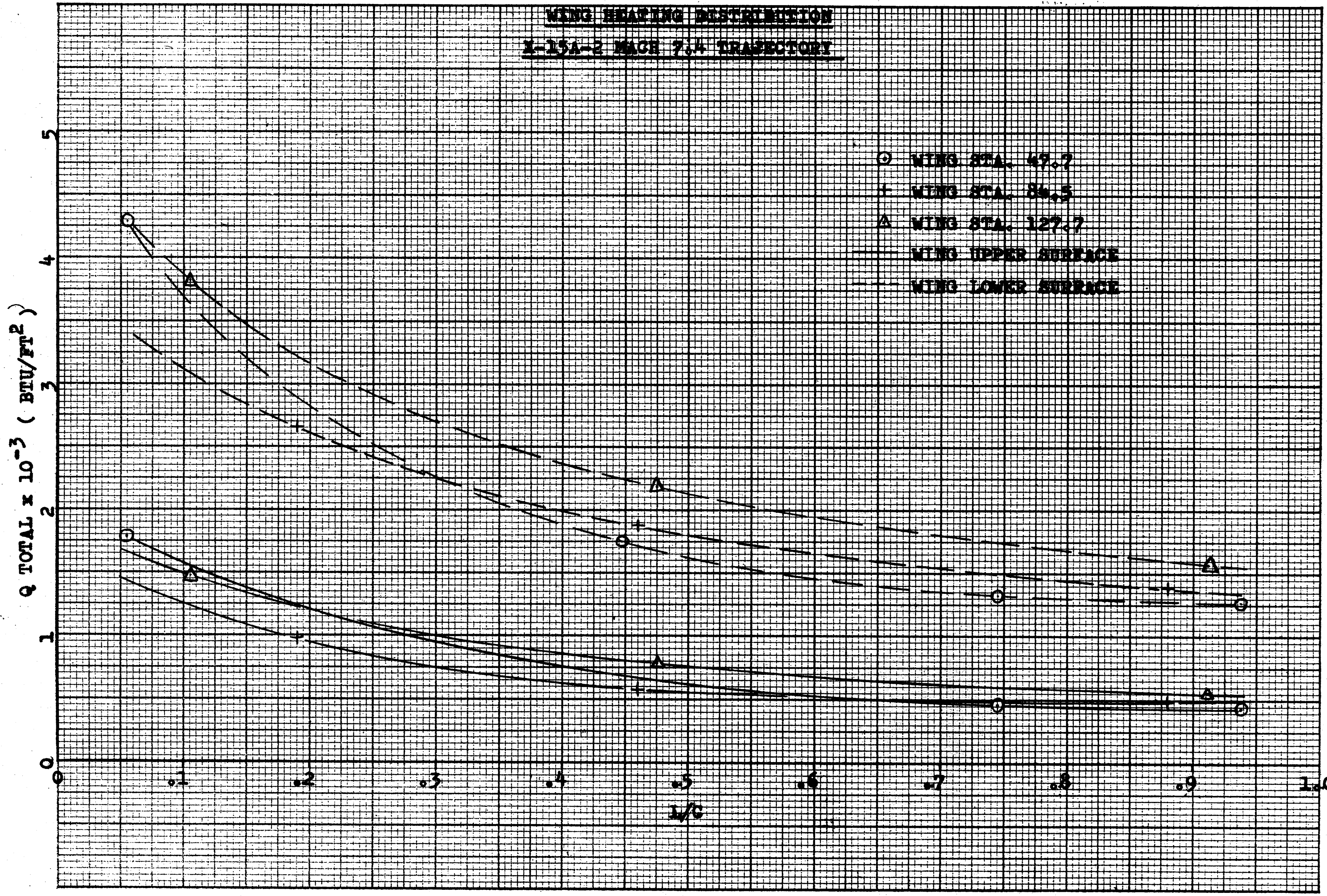
WING HEATING DISTRIBUTION
X-15A-2 MACH 7.4 TRAJECTORY

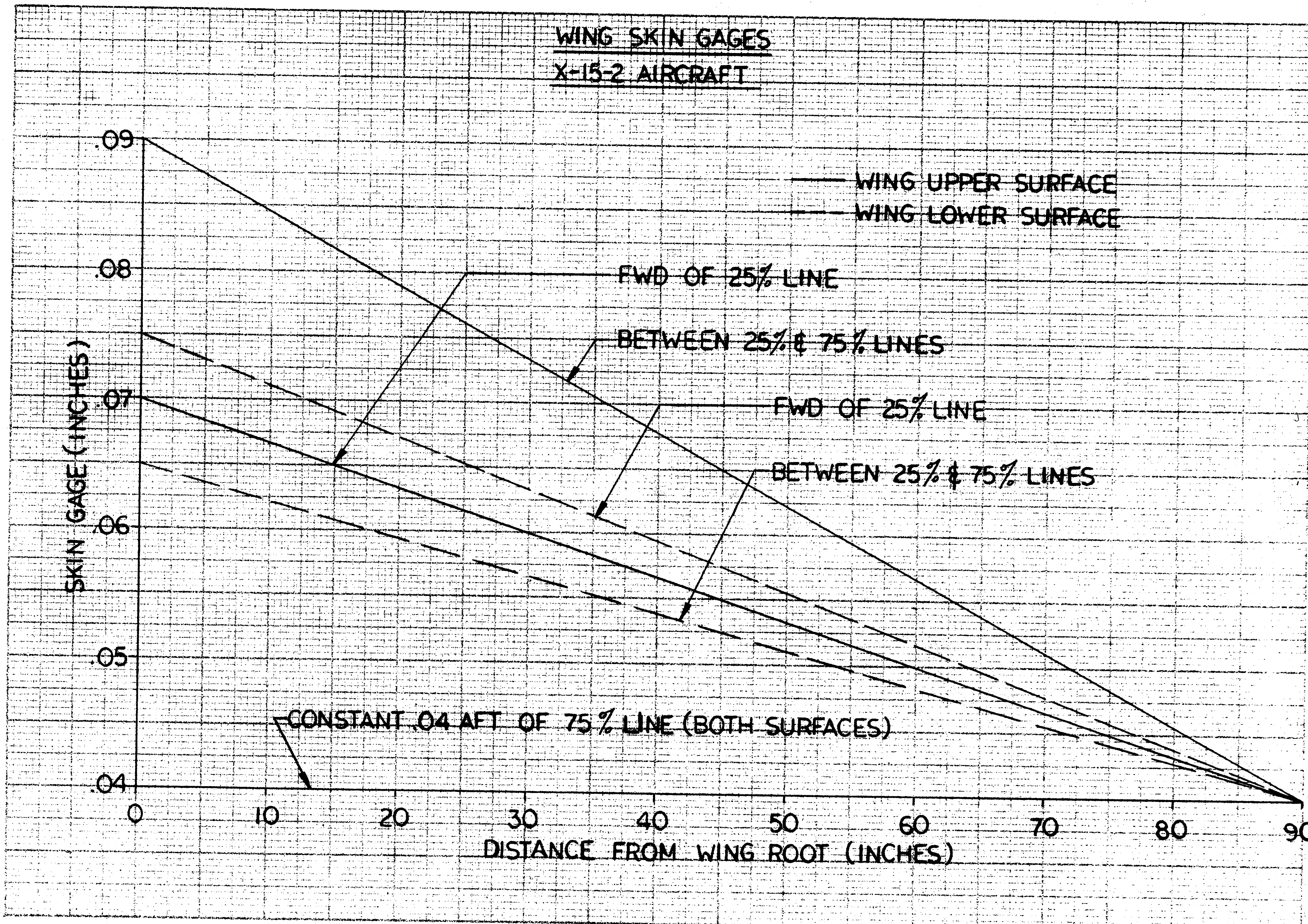
WING SKIN GAGES
X-15-2 AIRCRAFT

FIG. III-46

FIG. III-47

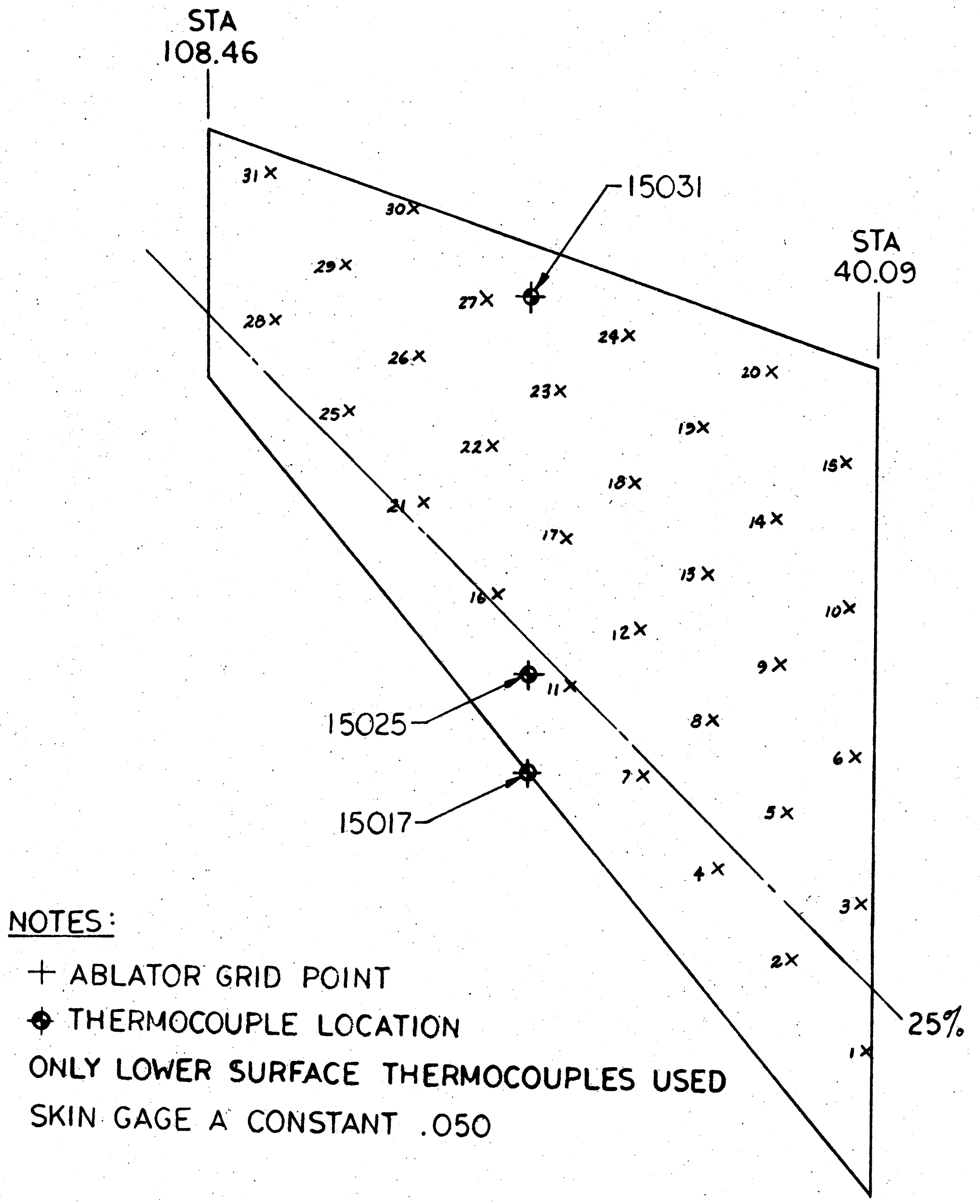

NOTES:

+ ABLATOR GRID POINT

⊕ THERMOCOUPLE LOCATION

ONLY LOWER SURFACE THERMOCOUPLES USED

SKIN GAGE A CONSTANT .050

HOR. STAB. DATA POINTS & ABLATOR GRID
X-15-2 T.P.S.

HORIZONTAL STABILIZER HEATING DISTRIBUTION

X-15A-2 MACH 7.4 TRAJECTORY

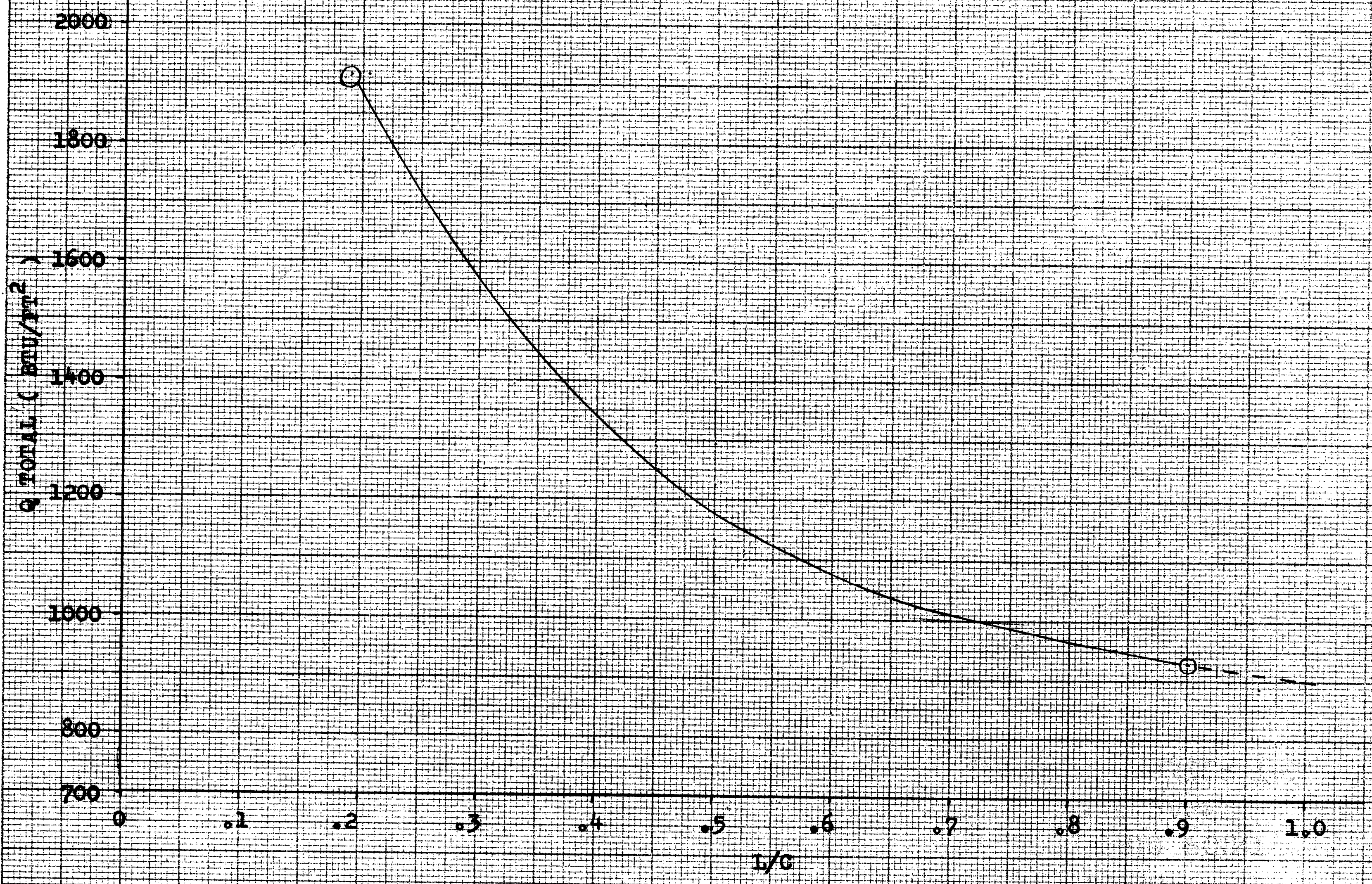

FIG. III-48

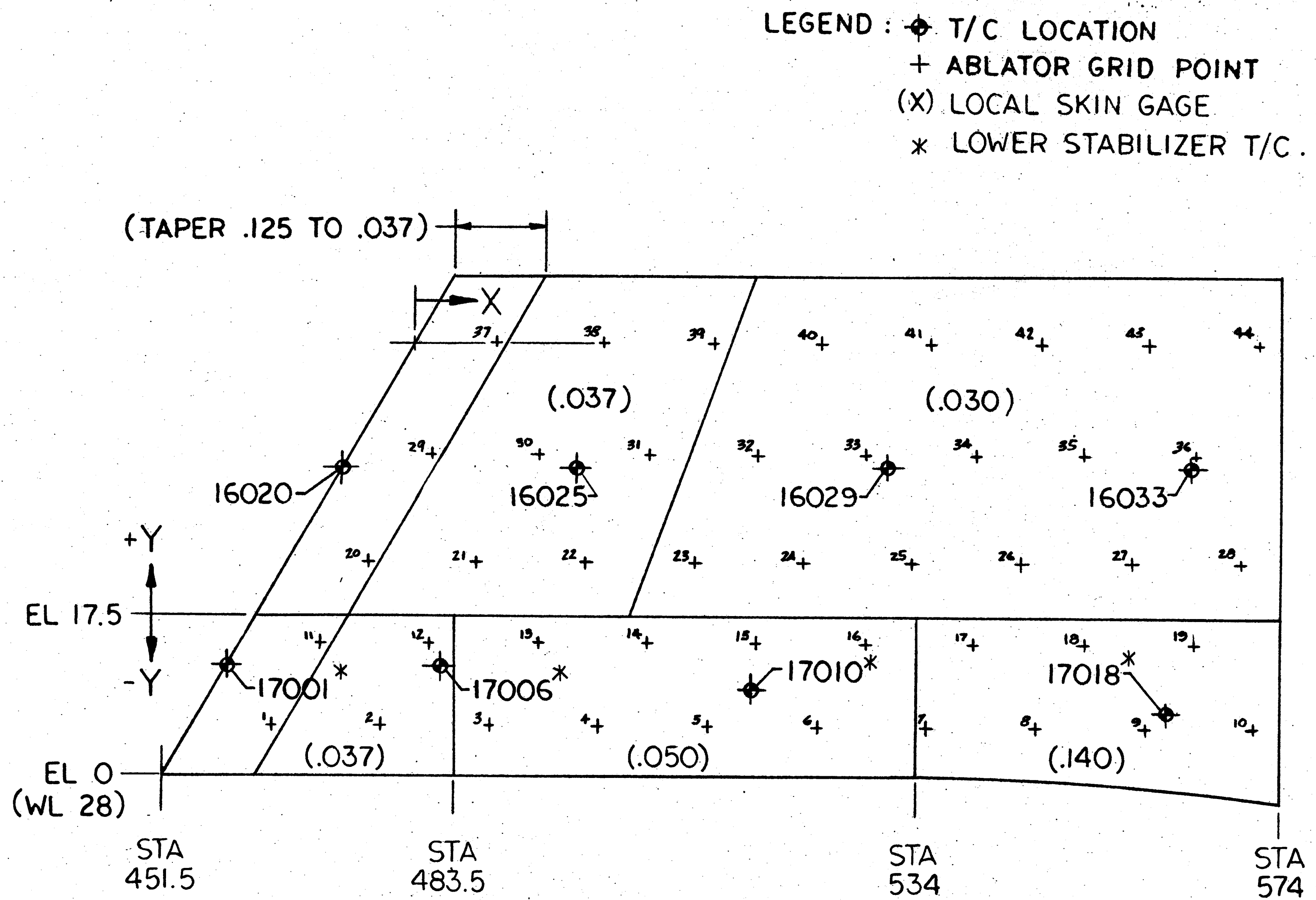

DATA POINTS & ABLATOR GRID
UPPER VERTICAL STABILIZER
X-15-2 T.P.S.

FIG. III-49

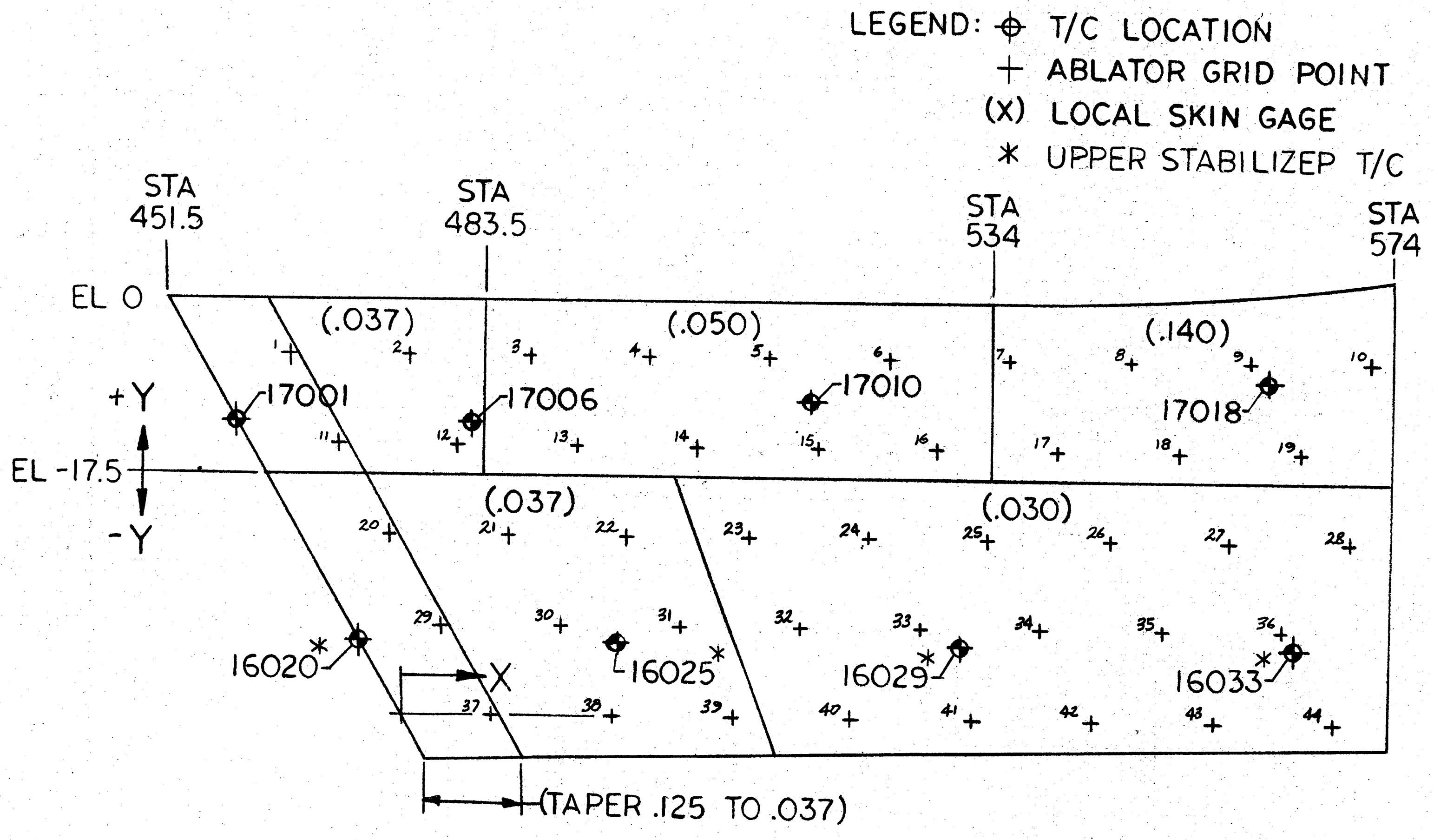

DATA POINTS & ABLATOR GRID
LOWER VERTICAL STABILIZER
X-15-2 T.P.S.

FIG. III-50

FIGURE . III-51

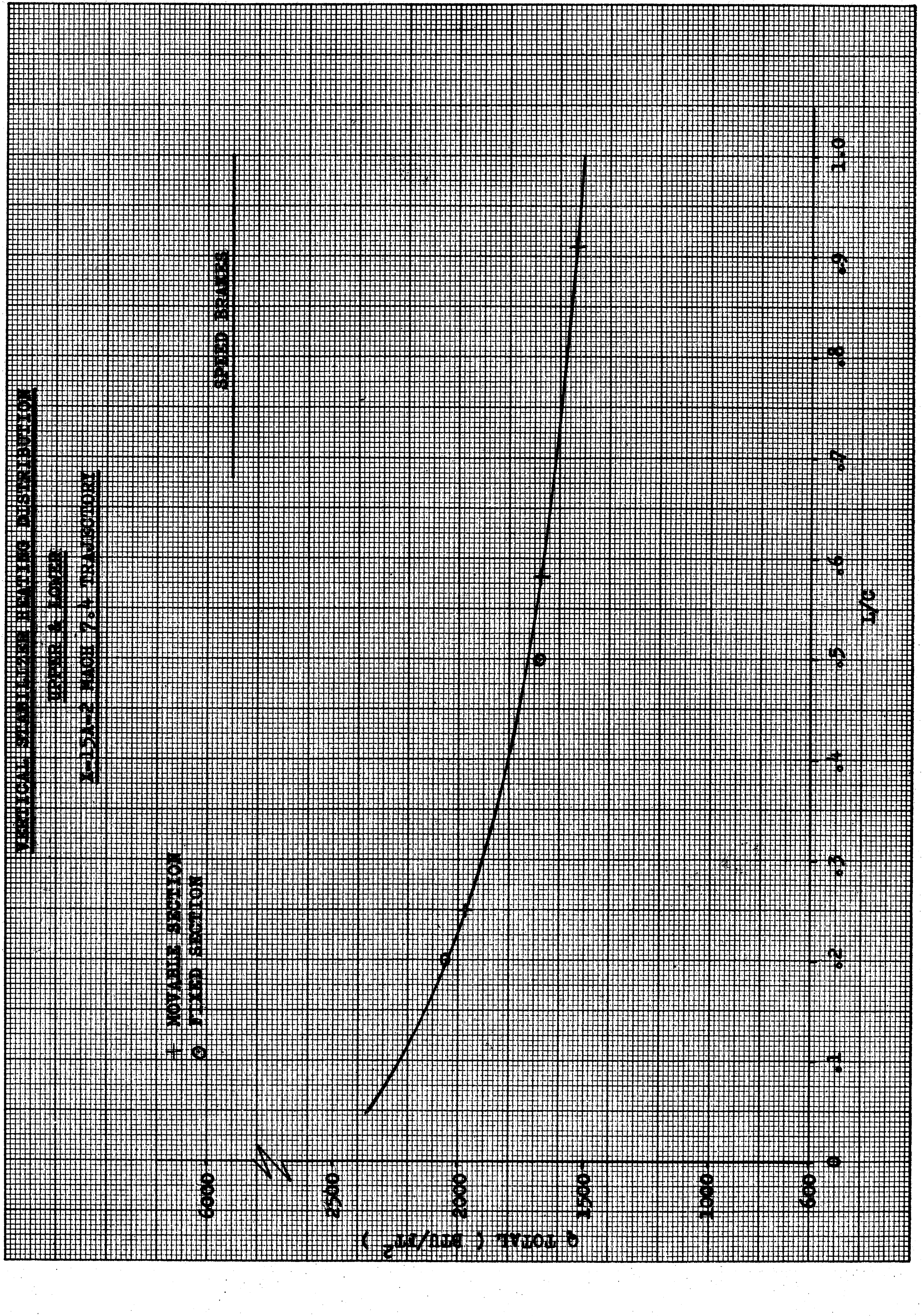

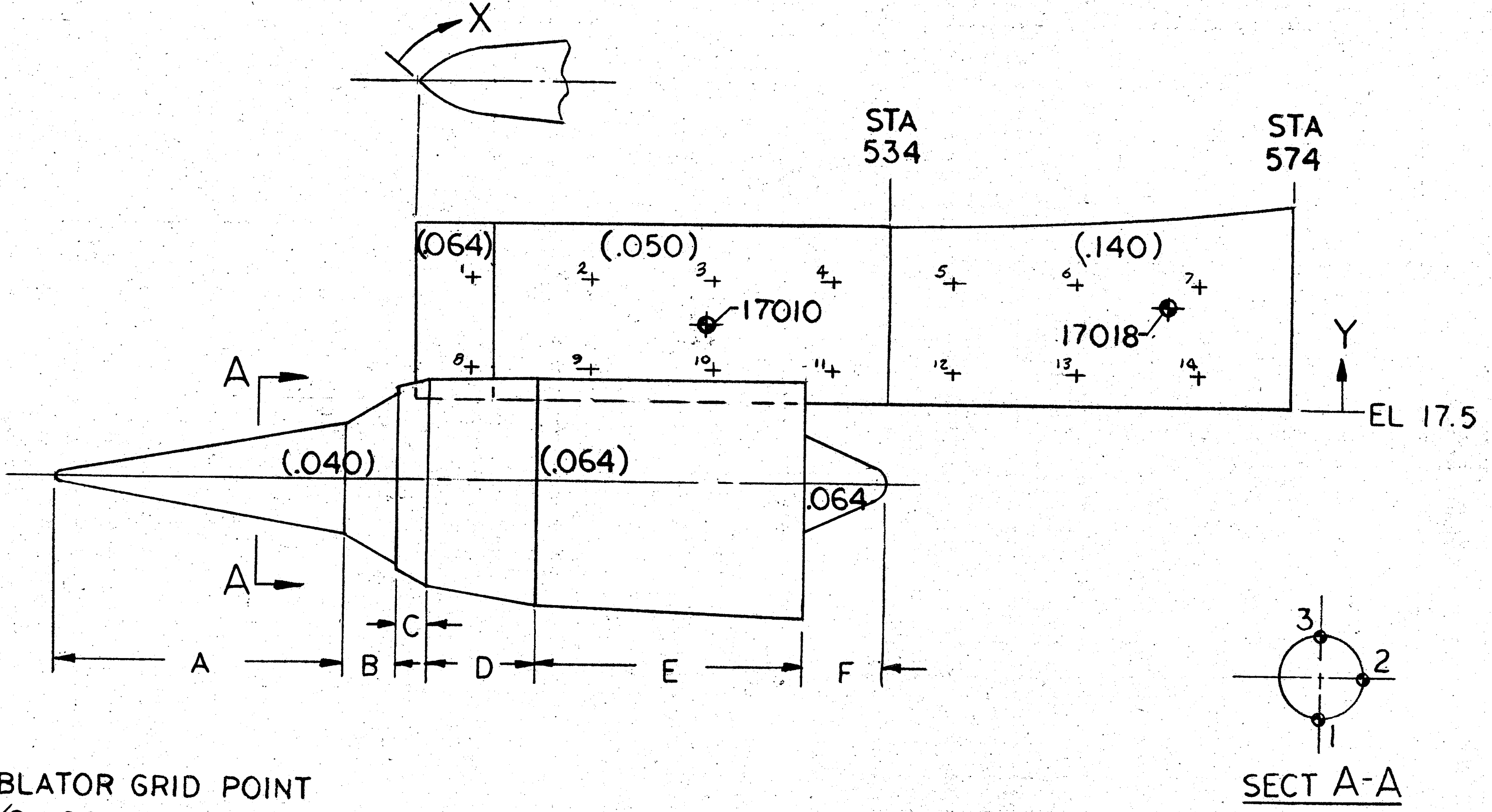

LEGEND:

+ ABLATOR GRID POINT
⊕ T/C LOCATION
(X) LOCAL SKIN GAGE

FIG. III-52

DATA POINTS & ABLATOR GRID
MODIFIED VENTRAL & DUMMY RAMJET
X-15A-2 T.P.S.

MODIFIED VENTRAL FIN
HEATING DISTRIBUTIONS
X-15A-2 MACH 7.4 TRAJECTORY

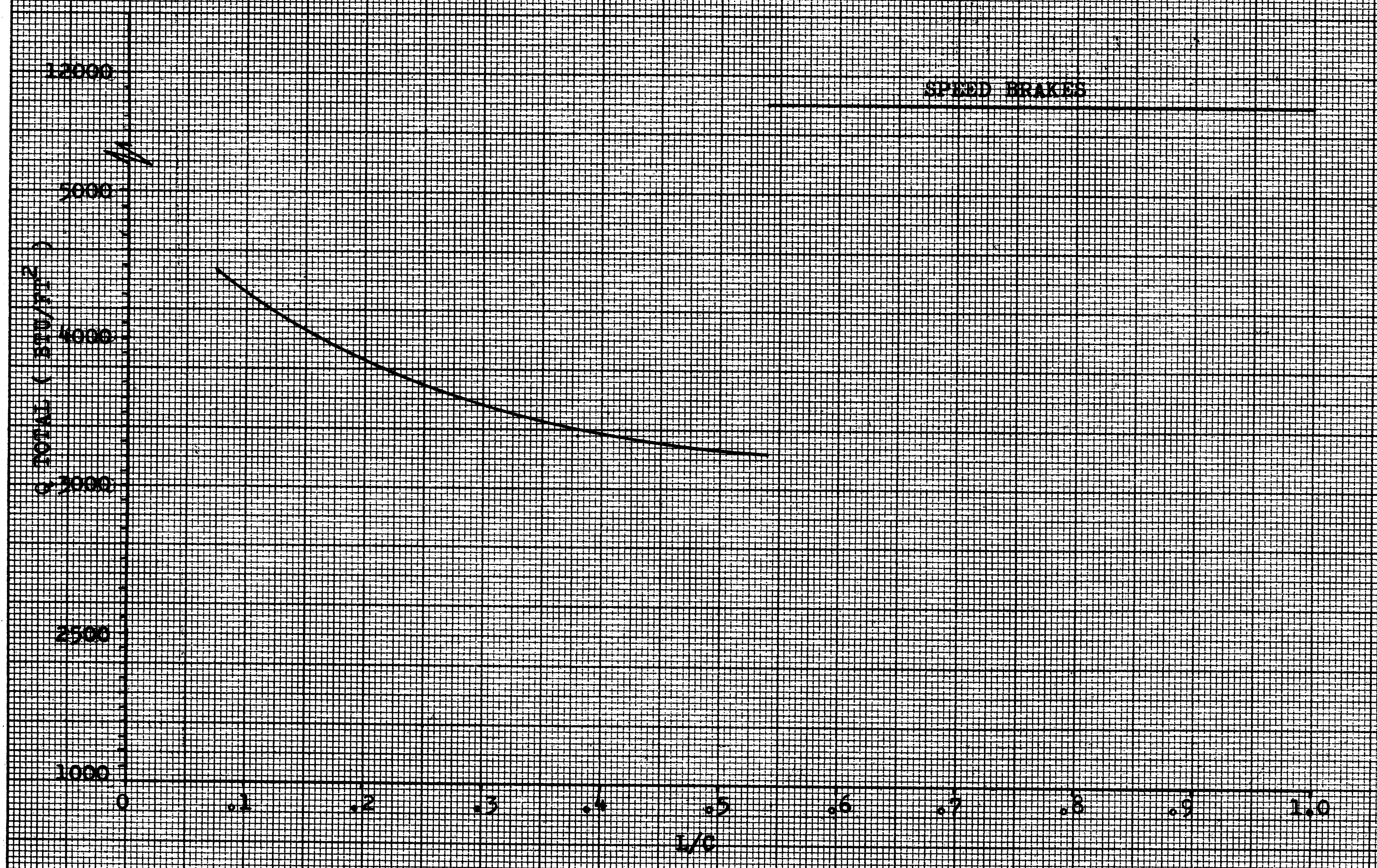

FIGURE III-53

IV. PROTECTION SYSTEM DESCRIPTION

The thermal protection system for the X-15A-2 aircraft is a composite of ablator material types and specialized design treatments. The primary system constituents are the premolded leading edge segments and the spray applied ablative layer. The overall system, however, incorporates a number of design treatments to accommodate the aircraft configuration, its system interfaces, and operational procedures. It is designed to impose no direct restrictions on aircraft functions or performance, and also attempts to avoid significant complication of the ordinary aircraft maintenance and servicing operations.

A. Design Approaches

A number of the aircraft's external features required special consideration during the design phase of the protection system. The evolved heat shield design accommodates, as much as practical, these requirements, and the pertinent features of the design are presented in Tables IV-1 thru IV-4. This tabulation of design approaches is grouped by design similarities, and references the illustrations which pictorially define the various ablator treatments. In addition, the salient aircraft features which necessitated these distinctive ablator designs are shown in Figs. IV-1 and IV-2.

B. Ablator Application

The ablator material application over the X-15-2 aircraft consists primarily of molded leading edge segments and a sprayed layer of MA-25s material. In addition, special ablator treatments are employed at certain areas of the vehicle, and a number of informative markings are required on the protected aircraft exterior. The definition and description of these features, whose combination makes up the thermal protection system, is given in the following sections and figures of this report.

1. Premolded Details:

Details of ESA 3560-IIA material are bonded over the leading edges of the aircraft using DC 93-027 adhesive. The configuration of these parts is shown in Figs. IV-30 thru IV-33 for the horizontal stabilizer, wing, vertical stabilizer, antenna, and canopy, respectively. The arrangement and/or location of these details on the aircraft are shown in the same figures which define the sprayed ablator layer for the various vehicle areas.

2. Sprayed Ablator Layer:

Most of the surface area of the aircraft is covered with a sprayed layer of MA-25s ablator material, with thickness varied to match environmental requirements. In order to adequately define this MA-25s ablator application and permit sufficient thickness variation to match environmental conditions without undue conservatism, a grid network was established for each section of the vehicle. Although efficient ablator layer design makes a small grid network desirable, the resultant large number of nodes would severely complicate matching the actual ablator to the specified one at time of application. Judgement was used, therefore, to select a grid which adequately defined the ablative layer without generating an unreasonable number of points to be controlled during, and inspected subsequent to, ablator application.

The attempted definition of the ablative continuum for the X-15-2 aircraft by a discrete network of points led to a number of discontinuities being encountered. These occurred primarily where skin gages or heat load changed radically between adjacent grid points (i. e., across front spar of wing, fuselage to tail cone, etc.). The nature of ablator application methods and the need for maintaining aerodynamic smoothness, precluded the incorporation of these abrupt thickness changes in the ablator system. Whenever these occurred, the ablator thickness was faired, either up or down, to provide a smooth transition between surrounding grid points.

Figures IV-34 thru IV-40 define the grid network and the ablator thicknesses required over the various areas of the vehicle. Included in each figure are the callouts and location of the molded leading edge members used in conjunction with the sprayed ablator.

The ablator thickness over the vane antennas and the main landing skid are not defined in these figures. The antenna application consists of a sprayed-up sheath of the MA-25s material. It is .25-inches thick, and is bonded over the antenna with DC 93-027 at the time of its leading edge installation. The main landing skids will be given an ablator layer commensurate with the adjacent fuselage areas. Ablator requirements for the ramjet were specified by NASA

3. Hard Points and Miscellany:

Inserts of the hard point material are limited to the bearing pads under the external tank sway braces, and at the forward jacking point. Size and actual locations for these inserts have been specified earlier in Figs. IV-10 and IV-28.

Certain of the access doors of the X-15-2 aircraft can normally be expected to be removed subsequent to the application of ablator to the vehicle. The ablation system provides for their removal and replacement by utilizing bonded strips of densified ablator bonded along the edges of these panels. The strips have individual 3/8-inch diameter cutouts for fastener access. Buttons of ablator are bonded into the cutouts after final panel installation. The extent of aircraft doors receiving this design treatment is delineated on Fig. IV-25, and the actual edge treatments in Fig. IV-17.

4. Ablator Wear Layer:

A white coating, DC 90-090, is applied over the exterior of the ablator protected aircraft. The coating is LOX compatible, and forms a tenacious, tear resistant layer approximately .003 inches thick. It is used as a wear layer to prevent inadvertent abrasion of the relatively friable primary ablator materials.

5. External Markings:

The X-15-2 aircraft contains an abundance of decorative and informative markings over its exterior. Although concealment of some of these markings by the ablator application poses no problem, those associated with aircraft or crew safety or operation must be transferred to the aircraft ablator surface. The extent of aircraft markings required on the ablator exterior is shown in Fig. IV-41. Markings will be applied to the wear layer using standard high temperature lacquer. Size, color, and location of lettering will be in accordance with N.A.A. Dwg. 2581-00010.

TABLE IV-1
Penetrations & Voids

Name	Description	Location	Functional/ Environ.	Disposition	Figure Ref.
1. Ball nose	Static attitude sys	Fwd nose	Static pres. ports & multi-direction. ball rotation	Spray MA25s up to backward facing step on ball ring.	IV-3
2. BCS nozzles	High altitude attitude cont.	Fwd nose & wings	Not to be used on these flights	Trowel ablator into plugged nozzles until flush.	IV-4
3. BCS valve drain	Hole to drain valve leakage	Bottom, fwd fuselage	Sys to be "dry" on these flights. Not required.	Spray over plugged hole.	IV-5
4. Low speed pitot	Retractable static press probe	Top fusel. fwd of canopy	Retracted during hi alt flt extended at low alt & speed. Static pressure measurement.	Bond inserts of MA-25s-1 over, and around small pop-up cover. Normal spray to edges of insert.	IV-6
5. Radar antenna	Flush mounted antenna	Bottom fuselage between vane anten.	Radiation transparency, thermal protection.	Spray MA25s over antenna.	--
6. UHF antennas	Vane antennas	Bottom fuselage aft nose gear	Radiation transparency, broadcast pattern maint.	Apply a molded ESA 3560-IIa L. E. & spray MA25s coating over remainder of antenna.	IV-7
7. Windshields	Transparent sections of canopy	Both sides of forward canopy	Transparency & protection from detrimental particle impact.	R.H. windows uncoated, with MA25s spray to coaming. Spray over shutter mechanism on L.H. side, leaving hinges bare.	IV-8 IV-9

TABLE IV-1 (CONT.)

Name	Description	Location	Functional/ Environ.	Disposition	Figure Ref.
8. Fwd supt point	Fwd jacking pad for a/c	R/H bottom, fwd fusel.	Access to index pin receptacle	Hard point insert in pad area with hole left for jack stand bolt. Plug hole after mating.	IV-10
9. Hydraulic drain	Drain hole in skin	R/H side fuse, next to cockpit	Hydraulic fluid & H_2O drain from master cylinders	Drain to be left open. Spray over plugged drain & remove plug.	IV-5
10. Fwd pylon attachment	Recessed recept. for attaching B-52 pylon	Top fusel. aft of cockpit	Access for B-52 pylon front hook	Receptacle to be left uncovered. Normal spray coat to edges.	IV-11
11. Stable platform elec. disconnect	Flush mounted, rectangular elec. connector	Top L/H fuse. aft of cockpit	Access to plug in male portion of connector from B-52	Connector portion to be left uncovered. Normal MA25s coating to within 1/4 inch of edges.	IV-11 IV-12
12. Elec pwr disconnect	Elec connector mounted in receptacle	Top R/H fuse. aft of cockpit	Access to connect male portion of connector	Connector & recept. to be left uncovered. Normal spray to within 1/4 in. of edges.	IV-11 IV-12
13. Static pres. taps	Flush pressure ports	Over entire airplane	Sys. not to be utilized for these flights.	Spray over holes. NASA to plug if they deem necessary to protect them from possible clogging.	--
14. Breathing O_2 discon.	Flush plug in connector	Top L/H fuse. aft of cockpit	Access to plug in male connect. from B-52	Recept. to be left uncovered. Normal spray to within 1 inch of edges.	IV-11 IV-12

TABLE IV-1 (CONT.)

Name	Description	Location	Functional/ Environ.	Dispostion	Fig. Ref.
15. N_2 discon.	Flush plug-in connector	Top fusel. aft of cockpit	Access to plug in connector from B-52	Connector left uncoated. Normal spray coat to within 1/4 inch of edges.	IV-11 IV-12
16. Hot air discon.	Flush plug in connector	Top L/H fuse. aft of cockpit	Access to plug in connector from B-52	Connector left uncovered. Normal spray to within 1/4 inch of edges.	IV-12
17. APU compartment drain	Tubular exten. from vehicle skin	Lower side fuse. aft of cockpit	Unrestricted exit of H_2O, H_2O_2, oil	Extend ablator partially along extension.	IV-13
18. Hyd pump seal drain	Hole in skin	Lower side fuse, L/H & R/H aft of cockpit	Unrestricted exit of lube oil, hyd fluid	Leave hole open. Plug during spraying then remove plug.	IV-5
19. Accessory comp drain	Hole in skin	Lower side fuse, L/H & R/H aft of cockpit	Unrestricted exit of oil, H_2O	Hole left open. Plug at ablator spray, remove after spray.	IV-5
20. Hyd reserv. drain	Extending tubul. boss (project.)	Lower side fuse, L/H & R/H aft of cockpit	Unrestricted exit of hyd. fluid	Extend ablator partially along extension.	IV-13
21. APU exhaust	Tubular exhaust stacks (project)	Upper side fuse, L/H & R/H aft of cockpit	Hi temp APU exhaust gasses. 800° F	Extend ablator partially along extension.	IV-13

TABLE IV-1 (CONT.)

Name	Description	Location	Functional/ Environ.	Disposition	Fig. Ref.
22. Aft supt. points	Flush mounted recept for aft support of a/c & tank sway brace	Lower aft fuselage L/H & R/H	Access for jack end & drop tank strut. High bearing capacity within receptacle.	Leave receptacle uncoated. Std sprayed ablator to edges.	--
23. Ammonia jettison ammonia vent H_2O_2 jettison APU H_2O_2 jet. engine H_2O_2 comp. drain	Tubes extending out the back of the fuselage & lower speed brakes	Rear end fuse. & lower speed brakes	Unrestricted exit of jettisoned fluids	Leave tubular extensions bare.	--
24. Horizontal stabilizer rig pin	Bolt holes in sides of fusel.	Fuselage sides below trailing edge of stabilizer	Holes to remain open to allow pin installation.	Plug during spray application then remove plugs. 1 inch diameter MA25s - 1 insert around hole.	IV-14
25. Fuselage camera window	Glass window in lower fusel. skin	Lower fusel. centerline	Transparency for camera viewing	Mask over window during spray. Normal ablator spray to edges.	--
26. Horizontal stabilizer torque tube seal	Sliding seal around stab. torque tube	Aft sides of fuselage at torque tube cutout	Freedom to rotate with stabilizer	Normal spray to edges of sliding seal plate. Seal plate to be left uncoated.	IV-15
27. Aft transport dolly points	Flush mounted receptacle in lower aft fusel. for jack ends of dolly	Lower aft fuselage on both sides of ventral fin	Access to jack ends of transport dolly	Leave receptacle uncoated. Standard sprayed ablator to edges.	--

TABLE IV-1 (CONT.)

Name	Description	Location	Functional/ Environ.	Disposition	Fig. Ref
28. Compart. drain holes	Holes along conduit bottom skin	Along conduit to fuselage junction	Remain open to permit drainage of conduit compartments.	Plug during ablator application then then remove.	IV-5
29. H_2O_2 vent	Open threaded hole in skin	Lower fuse. left side next to ventral fin	Unrestricted exit of pressurization gas or peroxide	Cover during ablator application. Normal MA25s to within 1/4 inch of edge.	--
30. Drop tank door actuating recept.	Elliptical plate held in place by one screw	Left & right sides of fuse. above drop tank clam-shell doors	Plate must be removed to provide access to door opening recepticle	Plate & surrounding area to be covered with MA25s-1 inserts.	--
31. Engine idle cooling receptacle	Recessed receptacle	Upper right hand conduit over wing	Access reqd for grnd test FTO & B52 pylon	Normal spray coat to within 1/4 inch of edge.	--

TABLE IV-2

GAPS & FAYING SURFACES

Location	Type	Description	Disposition	Fig. Ref.
1. Wing L/E to fuselage	Expansion	Gap between wing & fuselage fwd of front spar	L. E. matl will extend to fuselage. Normal spray over inconel foil fillet.	IV-16
2. Fuselage side conduits expansion joints	Expansion	Vertical gaps between conduit sections	Gap to be plugged with sealing tape. Sprayed ablator stops back from edge of joint.	IV-17
3. Canopy periphery	Moving	Canopy slides fwd 1" to lock, wiping combing	Install normal spray coat to fuselage around sides & front of canopy while it is in the fwd locked position. Aft end of canopy to be left unprotected.	IV-18
4. Flap to fuselage	Moving	Sealed opening between flap & fuselage. Metallic seal wipes along fuselage wall	Metallic seal to be removed by NASA. Gap will be reduced by bonding an insert of MA-25s-1 against fuselage.	IV-19
5. Flap to wing joints	Moving	Open gap at outboard end, nested cove at leading edge	L. E. of flap sprayed with flap in up position. No definite assurance of cove coverage without flap removal.	IV-19

TABLE IV-2 (CONT.)

Location	Type	Description	Disposition	Fig. Ref.
6. Horizontal stabilizer to fuselage	Moving	Open gap 3/8" wide between stabilizer & fuselage	Bond inserts of MA-25s-1 to fuselage where the stabilizer prevents spray application. Normal ablator spray elsewhere. Extend stabilizer leading edge section inboard 3/16" past edge of stabilizer skin. Apply ablator to inboard closing rib of stabilizer fwd of torque tube.	IV-20
7. Upper & lower vertical stabilizer movable to fixed section gaps	Moving	Gap between fixed & movable vertical stabilizer portions.	Thermal protection of surfaces within the gap is difficult. Spray coating on sides will serve to reduce gap between the fixed and movable sections. No attempt will be made to apply ablator to the faying surfaces.	IV-21
8. Upper & lower speed brakes	Moving	Gaps between speed brakes & ventral & fuselage. Fwd mounted wiping hinge. Brakes swing out.	Normal protection over face of brake. Protection at fwd end tapered to clear hinge. Spray speed brake & other exposed surface. Leave hinge arms & hyd. equipment bare.	IV-21

TABLE IV-2 (CONT.)

Location	Type	Description	Disposition	Fig. Ref.
9. External tank seal	Static	Elastomeric seal around periphery of of external tank.	Only requirement is that seal has enough deflection to accommodate ablator thickness. This has been checked with tanks installed.	IV-22
10. B-52 pylon seal	Static	Elastomeric seal around periphery of B-52 pylon shroud	Only requirement is that seal has enough deflection to accommodate ablator thickness. This has been checked with aircraft mated.	IV-22

TABLE IV-3

Accessibility Requirements

Name	Description	When Closed	Access Requirements	Disposition	Fig. Ref.
1. Nose gear door	Single piece movable door over nose gear compartment	Day prior to launch	Proper functioning of door required	Spray coat over closed door, cut around edge to permit opening.	
2. Nose gear scoop door	Small door, spring loaded open, in fwd portion of nose gear door	Morning of launch	Access to locking screw reqd. Proper functioning of door not impeded	Spray coat over closed door, cut around edge. Screw covered after closing.	
3. Ram air door	Small mech. opened door on lower C/L fuselage aft of nose gear door	Normally closed	Must be operable to permit use of ram air for cooling.	MA-25s-1 insert bonded over door and around opening. Local cutouts for GSE attachment to be plugged before flight.	
4. External canopy release	Round plug latch & large rectangular door on R/H side of fuselage near canopy front	Normally closed	Round plug latch must be visible for emerg. release of canopy. Rectangular door operable	Bond hard point matl over round plug to mark latch. Spray coat over door & cut around edges.	IV-23
5. Tube cutting level	Long, narrow flush lever on R/H side of fuselage behind canopy	Normally closed	Lever held down by quick release fastener in lower end. Must be immed. accessible for emerg. canopy removal.	Bond hard point matl strip to lever to mark. Spray up to strip but leave fastener head exposed.	IV-23

TABLE IV-3 (CONT.)

Name	Description	When Closed	Access Require.	Disposition	Fig. Ref.
6. Horizontal stabilizer alignment gage	Protractor type gage on each side of a/c at L. E. horizon. stabilizer	Gage removed after control sys servicing	Gage held in place by 3 bolts on each side of a/c	Leave bolt holes open. Plug when spraying then remove plug. Add 1 inch dia. insert of MA25s-1 around holes.	IV-14
7. Engine compart. fire doors	Spring loaded doors on top of aft side fairings	Normally closed	Must be accessible in event of engine fire	Normal spray to edges of doors. Bonded MA-25s-1 inserts over doors and latches.	IV-24
8. Aft gear ground safety pin	Pin gear to prevent inadvertent opening	Pin installed while on grd.	Hole for safety pin must be open	Spray up to pin during ablator appl & leave hole open when pin is removed.	
9. Speed brake operating mech.	Mechanism for speed brake is exposed at aft end of a/c		Area is completely open to rear.	No ablator appl. will be applied on aft end of a/c.	
10. Service Doors: F-1 thru F-4, F-9 thru F-12, F-15, F-16, F-19, F-20, F-21, F-23, F-24, F-27, F-29, F-34, F-37, F-38, F-40, F-45, F-53 thru F-56, F-58, F-64, F-65, F-68, F-71, F-72, F-74, F-77, thru F-89, F-82, F-83, F-84, F-91, F-95, F-103, F-104, F-201 thru F-204, F-35, F-36, F-41, F-42, F-47 thru F-52, F-59, F-60, F-61, F-69, F-70, F-75, F-90			Access can normally be expected following ablator appl, during normal maintenance and service operations	Door periphery bare of sprayed ablator. Strips of MA-25s-1 bonded along panel edges with local cut-outs for fastener access. Cutouts plugged after panel installation.	IV-17 IV-25

TABLE IV-3 (CONT.)

Name	Description	When Closed	Access Require.	Disposition	Fig. Ref.
11. Fuel drop tank clam shell doors	Spring loaded doors over fuel drop tank connectors	After tank jettison	Must be operable to permit mating of tank & protection of tank connectors after jettison	Normal spray to door edges & over exterior of doors. Hinges left bare of ablator.	IV-26 IV-27

TABLE IV-4
Hard Point & Shock Areas

Name	Description	Location	Requirements	Disposition	Fig. Ref.
1. Fwd supt point	Fwd jacking pad for a/c. Pad size 4 x 4	R/H bottom fwd fuselage	Access to index pin. Bearing strength 650 psi	Hard point material in bearing pad area with hole for jack stand pin. Opening to be plugged after mating.	IV-10
2. Tank inbd sway brace	Pads, 2 x 2 bear against the lower fuselage skin. Two pads each side	Aft lower sides of fuselage	Bearing strength 1600 psi	Inserts of hard point matl in areas of bearing pads.	IV-28
3. Tank aft attachment point	Quick disconnect plug below skin. Spring loaded door covers plug after tank jettison	Aft lower sides of fuselage	Snap closing of door. Protection of door & hinge from adverse thermal expos. No shock sensitive matl or adhesive.	Normal ablator spray to edges of door. Door and hinge to be flown bare. Exposure may necessitate replacement after flight.	--
4. Tank fwd attachment point	Same as above	Fwd lower sides of fuselage	Same as above	Same as above	--
5. Fuel drop tank disconnects	Quick disconnect plugs below skin line are covered by longitudinal clam shell, spring loaded doors after tank jettison	Lower sides of fuselage	Same as above	Normal spray over door exterior. Leave hinges and area under doors bare of ablator.	IV-27

TABLE IV-4 (CONT.)

Name	Description	Location	Requirements	Disposition	Fig. Ref.
6. B-52 aft attachment	Spring loaded shackle on sides of fuselage to allow attach. to B-52	Aft side of fuselage	Shackle must be accessible for manual opening & free to autom. close after separation	Normal ablator spray to within 1 inch of shackle. Shackle and surrounding area left bare to permit attachment of pylon support.	--

TABLE IV-5

LOX System Interfaces

Name	Description	Location	Functional/ Environ.	Disposition	Fig. Ref.
1. LOX top off vent	Recessed receptacle	Top of fusel. aft of cockpit	Attachment to B52 boom. LOX spillage at disconnect	Recept. left uncoated. Normal spray to within 1-1/2 inches of edge.	IV-11 IV-14
2. LOX fill valve	Plug below spring loaded door	Top L.H. fuselage side fairing	Attach. to B52 pylon. LOX spillage at disconnect. Snap closing of door.	Normal spray coating to within 1 inch of edges of door. Door left uncoated.	IV-29
3. LOX fill sump drain	Flush hole in skin	L.H. fusel. side fairing	No blockage to retard LOX exit	Plug at spray appl. Remove plug after spraying.	IV-5
4. LOX drop tank vent valve	Valve below spring loaded door	Top L.H. fusel. side fairing	Snap closing of door, no shock sensitive matl or adhesive to be used.	Normal spray coating within 1 inch of edges of door. Door left uncoated	IV-29
5. External LOX tank fill & vent	Quick disconnect plugs below skin line covered by spring loaded longitudinal clam shell doors	Lower L.H. fusel. side fairing	Snap closing of door, no shock sensitive matl or adhesive to be used.	Normal spray coating to edges of door and over door exterior. Door hinges left uncoated.	IV-26 IV-27
6. LOX jettison line	Tube extending out back of fuselage	Rear end of fuselage	Unrestricted exist of jettisoned fluids	End of tube bagged during spray. Tubular extension to be left bare.	--

TABLE IV-5 (CONT.)

Name	Description	Location	Functional/ Environ.	Disposition	Fig. Ref.
7. B-52 pylon LOX top off overflow	Large diameter LOX outlet	Top. fwd L. H. side of pylon	Grd service hose attaches to outlet. LOX from hose indicates full tank Severe LOX leak. from around hose attach. LOX runs down pylon over side of X-15. Ablator LOX impact sensitivity hazard.	--	--
8. B-52 pylon LOX vent line	Rigid pipe extending from pylon shroud	Lower L. H. side of pylon shroud	LOX spillage out of line during servicing. Sprays toward B-52 wheel doors, & splashes back toward X-15. Ablator LOX impact sensitivity hazard.	--	--
9. LOX top off control	Recessed disconnect	Crown of fuselage over wing	Plug from B52 pylon plugs into receptacle.	Normal spray to within 1/4 inch of recept. edge.	--

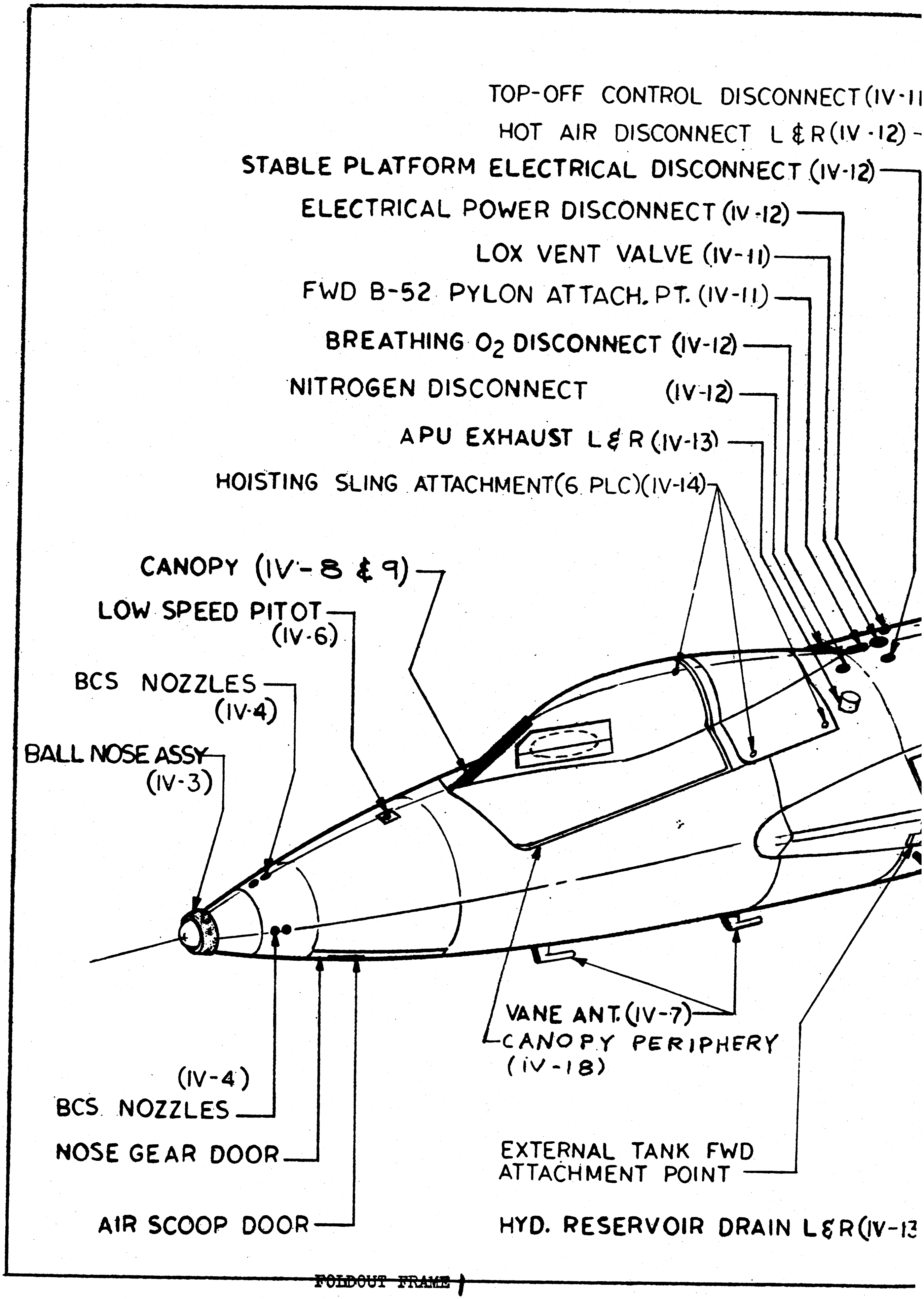

~~FOLDOUT FRAME~~ 1

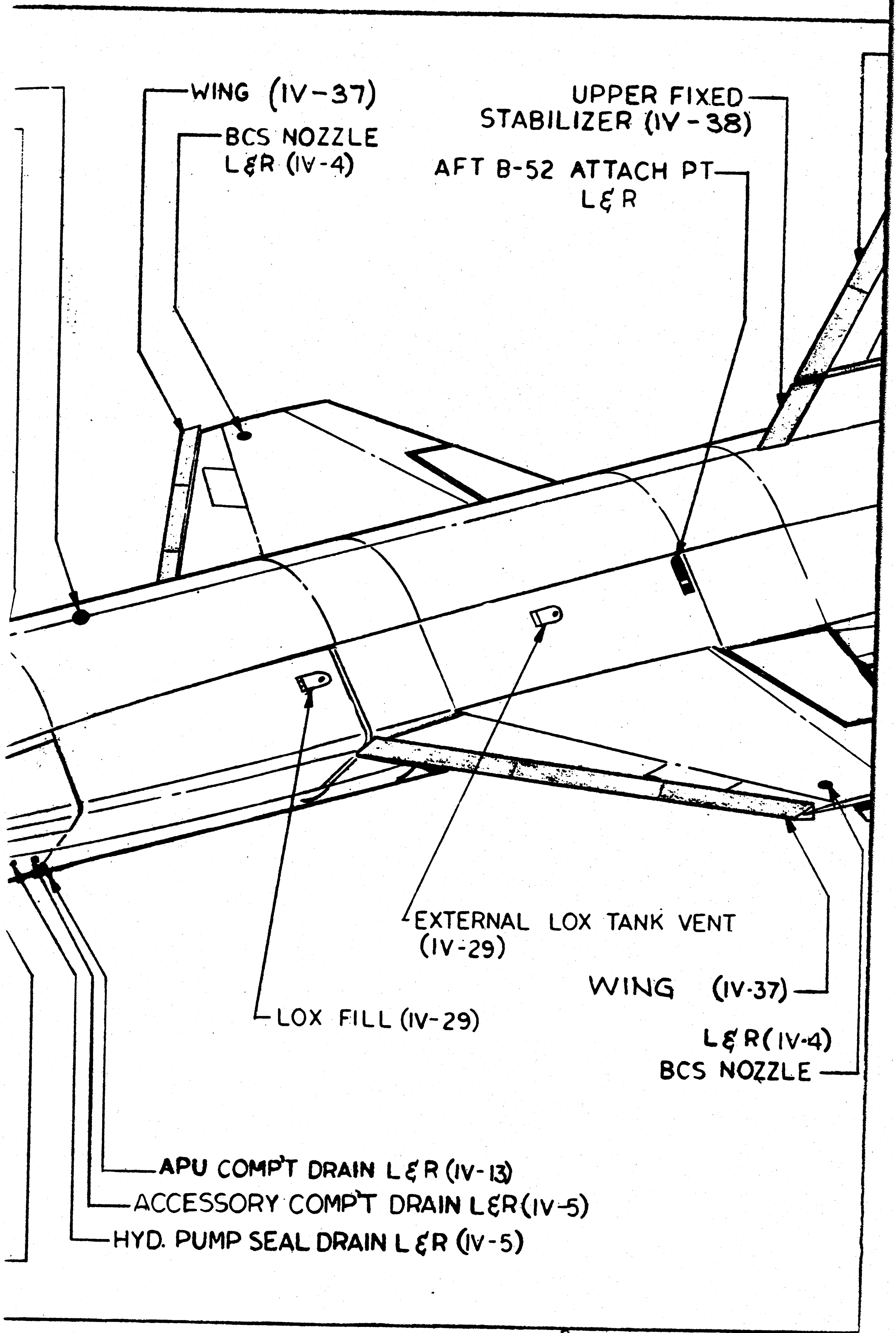
WING (IV-37)
BCS NOZZLE L & R (IV-4)
UPPER FIXED STABILIZER (IV-38)
AFT B-52 ATTACH PT L & R
EXTERNAL LOX TANK VENT (IV-29)
WING (IV-37)
LOX FILL (IV-29)
L & R (IV-4) BCS NOZZLE
APU COMP'T DRAIN L & R (IV-13)
ACCESSORY COMP'T DRAIN L & R (IV-5)
HYD. PUMP SEAL DRAIN L & R (IV-5)

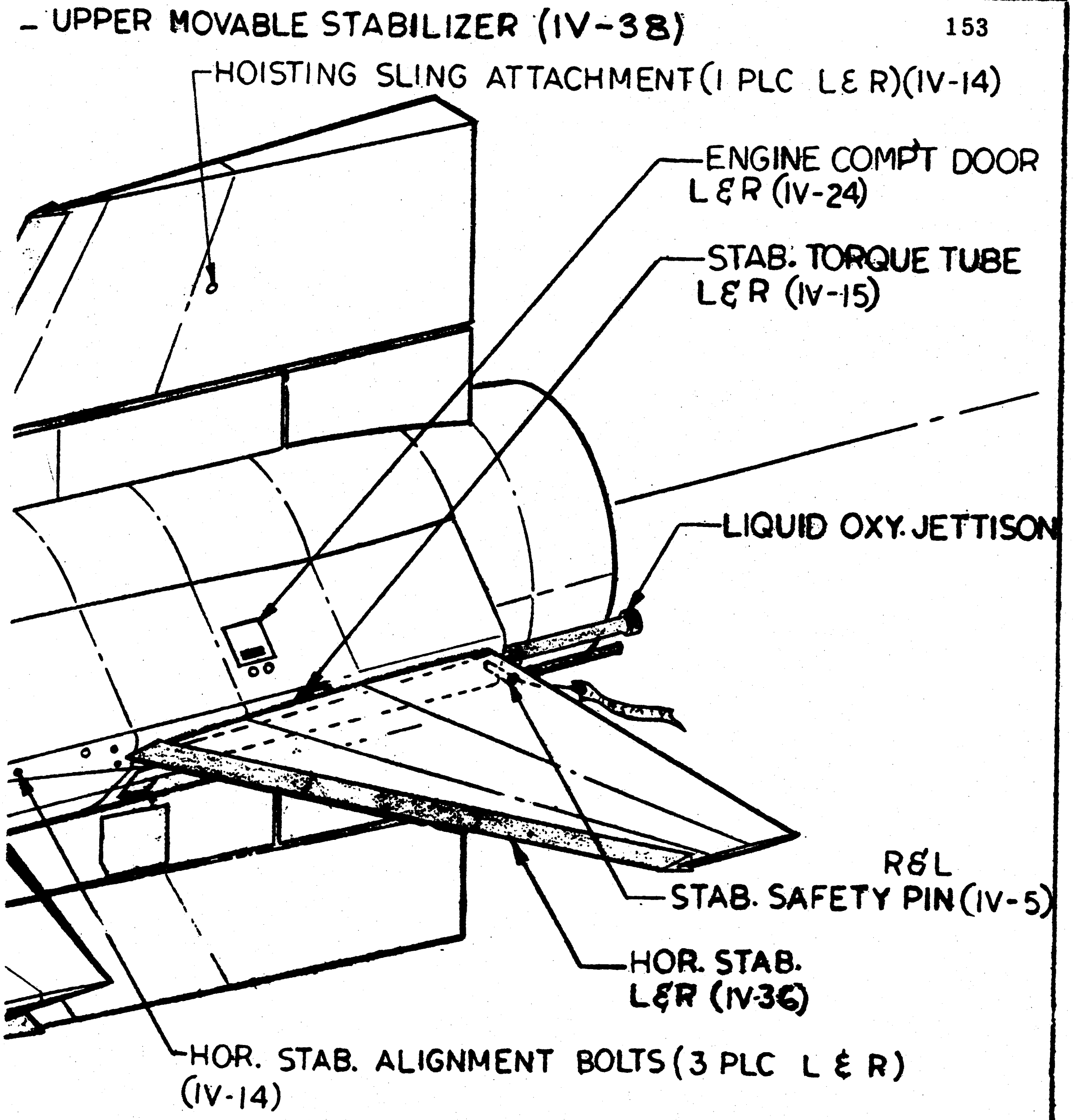

(XX)-FIGURE REFERENCE

ABLATION SYSTEM SPECIAL AREAS
AIRCRAFT LEFT SIDE
FIGURE IV-1

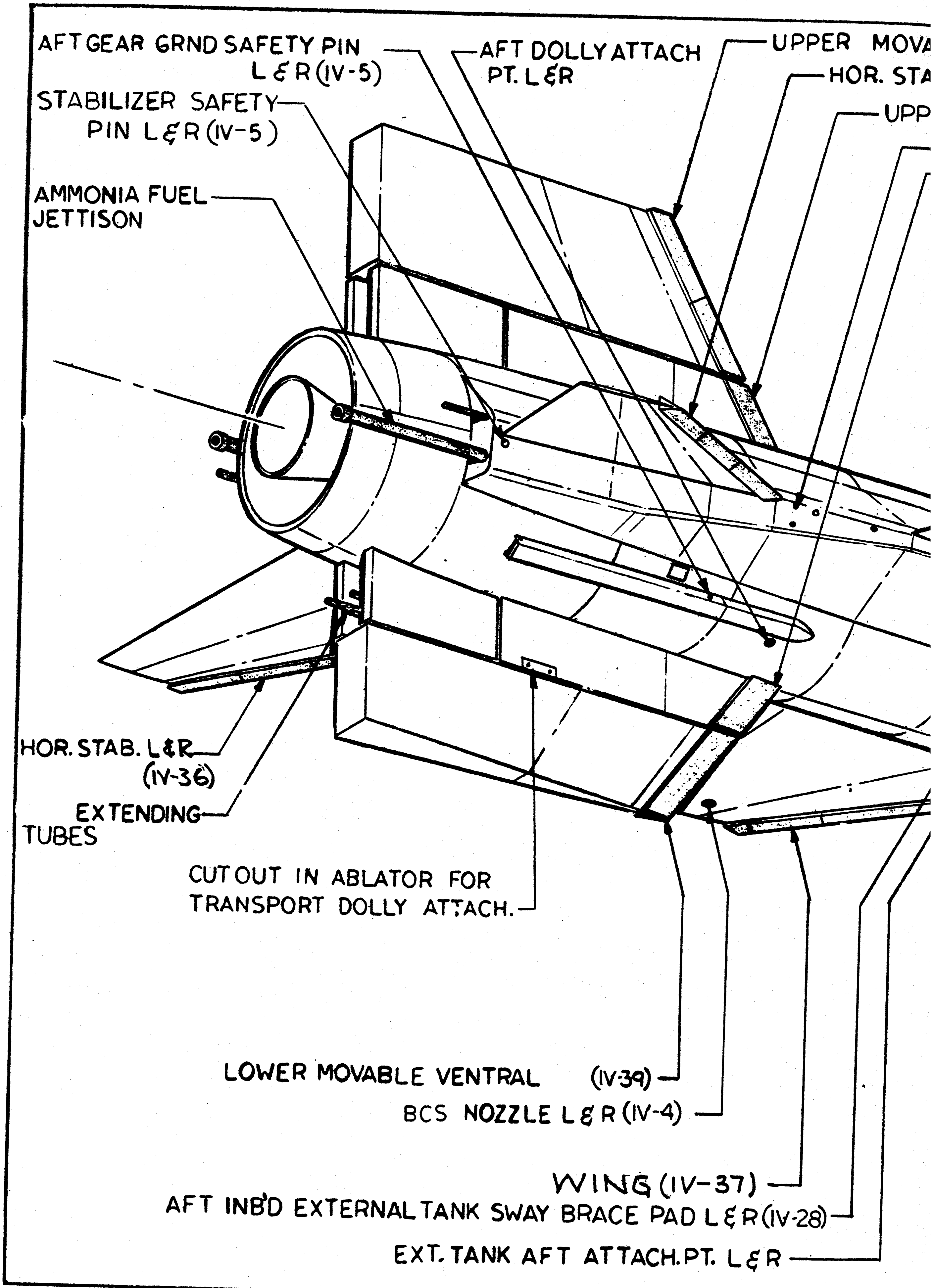

FOLDOUT FRAME /

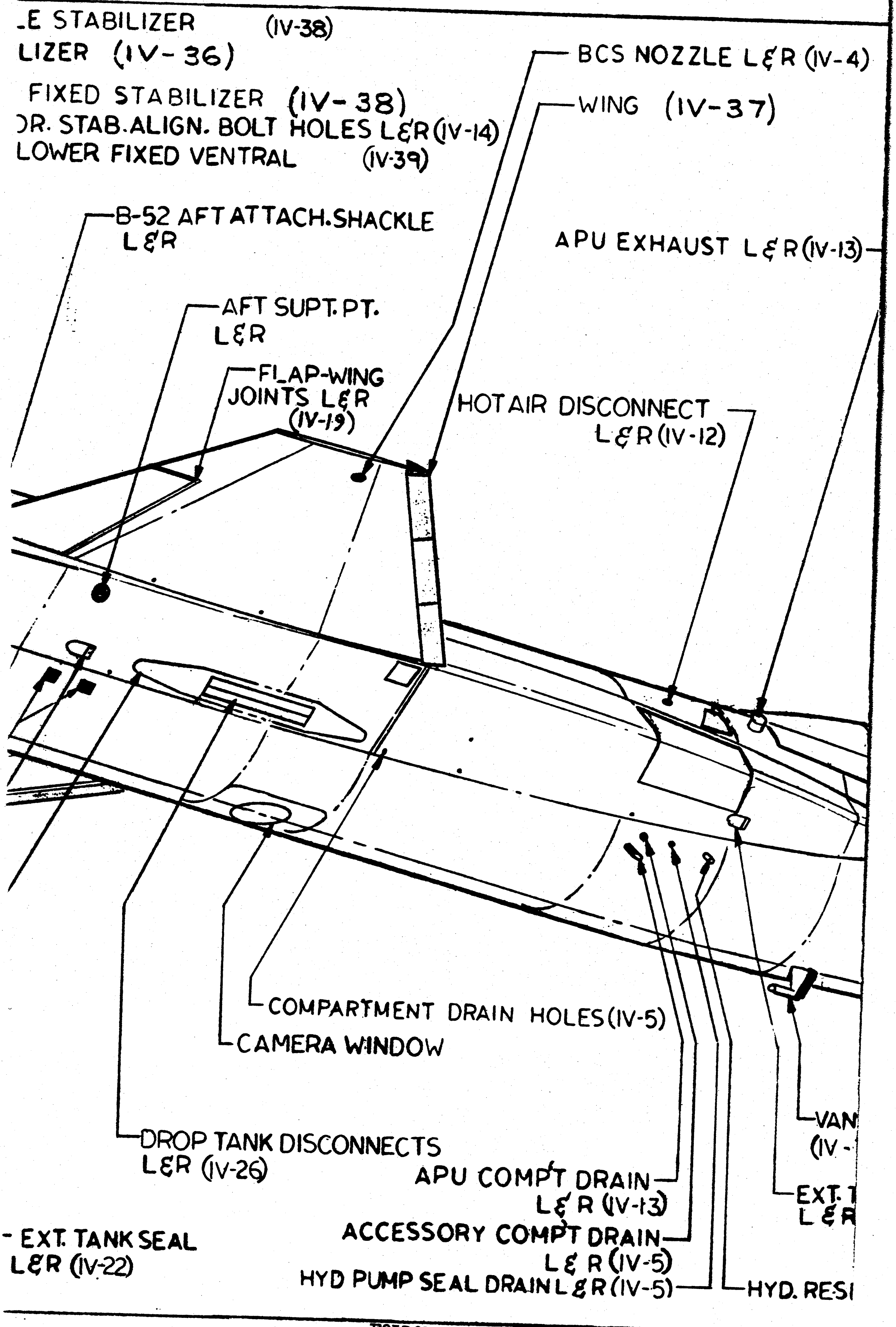
E STABILIZER (IV-38)
LIZER (IV-36)
FIXED STABILIZER (IV-38)
R. STAB.ALIGN. BOLT HOLES L&R (IV-14)
LOWER FIXED VENTRAL (IV-39)
BCS NOZZLE L&R (IV-4)
WING (IV-37)
B-52 AFT ATTACH.SHACKLE L&R
APU EXHAUST L&R (IV-13)
AFT SUPT. PT. L&R
FLAP-WING JOINTS L&R (IV-19)
HOT AIR DISCONNECT L&R (IV-12)
COMPARTMENT DRAIN HOLES (IV-5)
CAMERA WINDOW
VAN
(IV -
DROP TANK DISCONNECTS L&R (IV-26)
APU COMPT DRAIN L&R (IV-13)
EXT. T
L&R
EXT. TANK SEAL L&R (IV-22)
ACCESSORY COMPT DRAIN L&R (IV-5)
HYD PUMP SEAL DRAIN L&R (IV-5)
HYD. RES

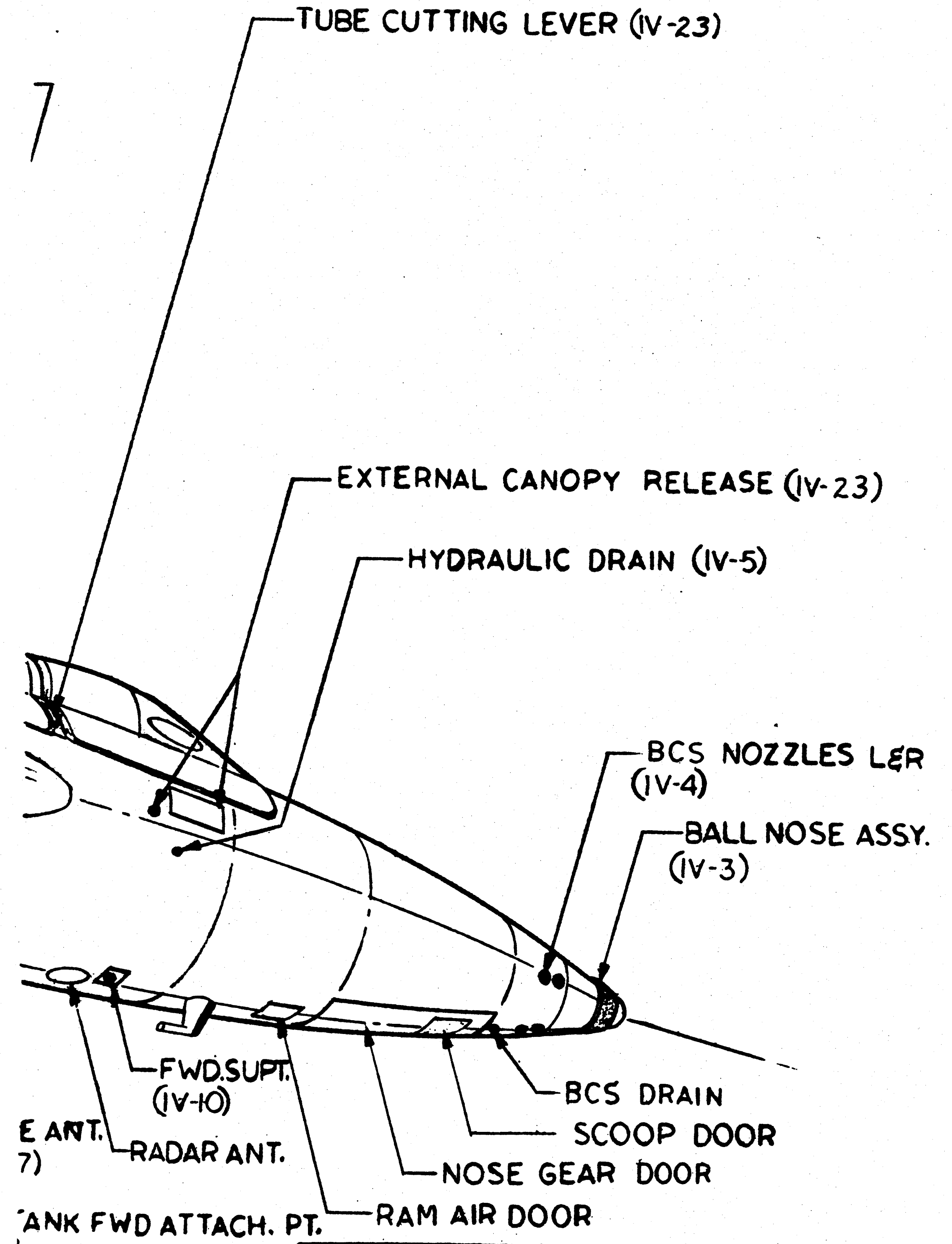

ABLATOR SYSTEM SPECIAL AREAS
AIRCRAFT RIGHT SIDE
FIGURE IV-2

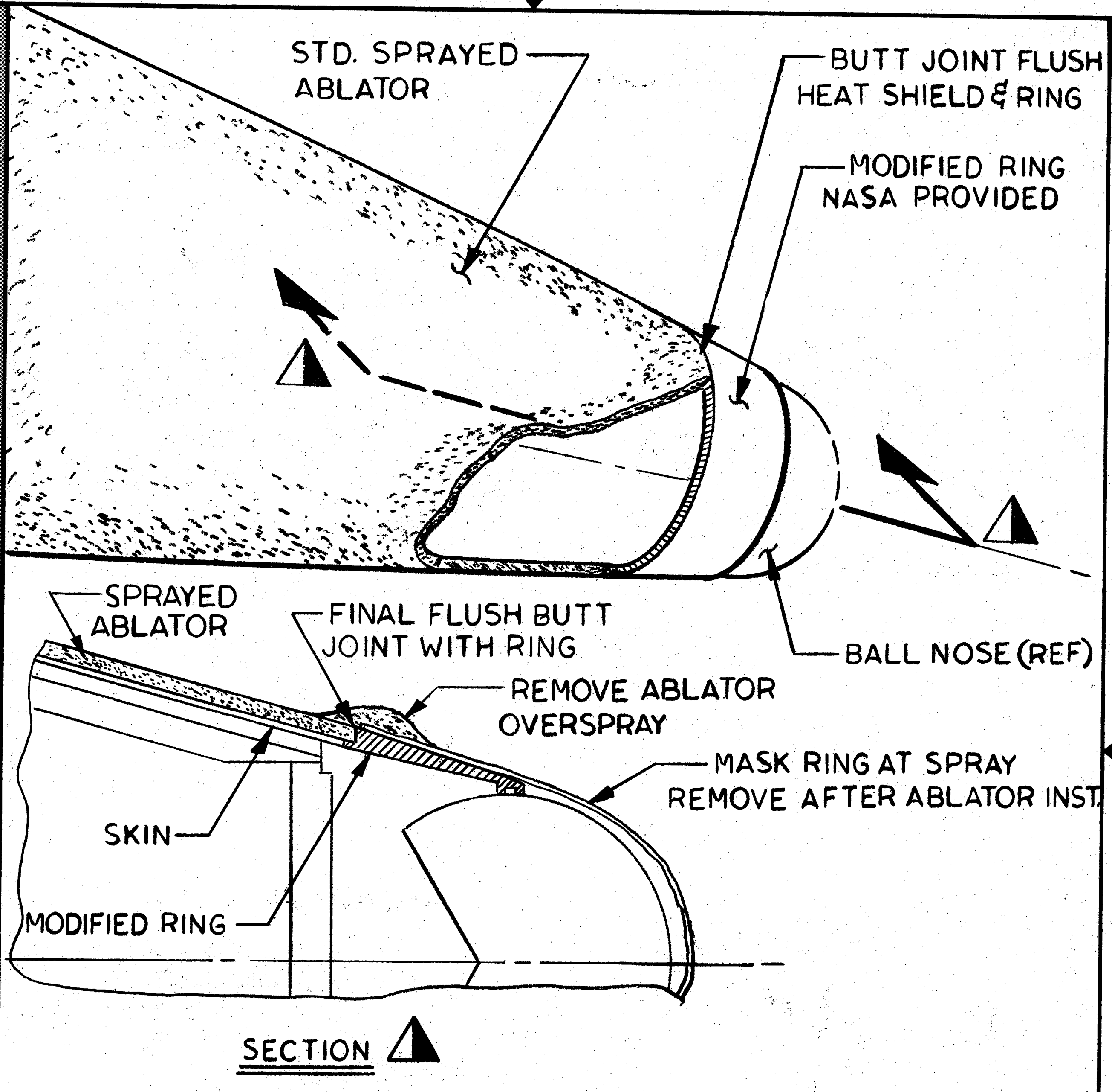

MODIFIED RING-BALL NOSE

FIGURE IV-3

SIZE	CODE IDENT NO.	
A	38597	
REV	SCALE	SHEET

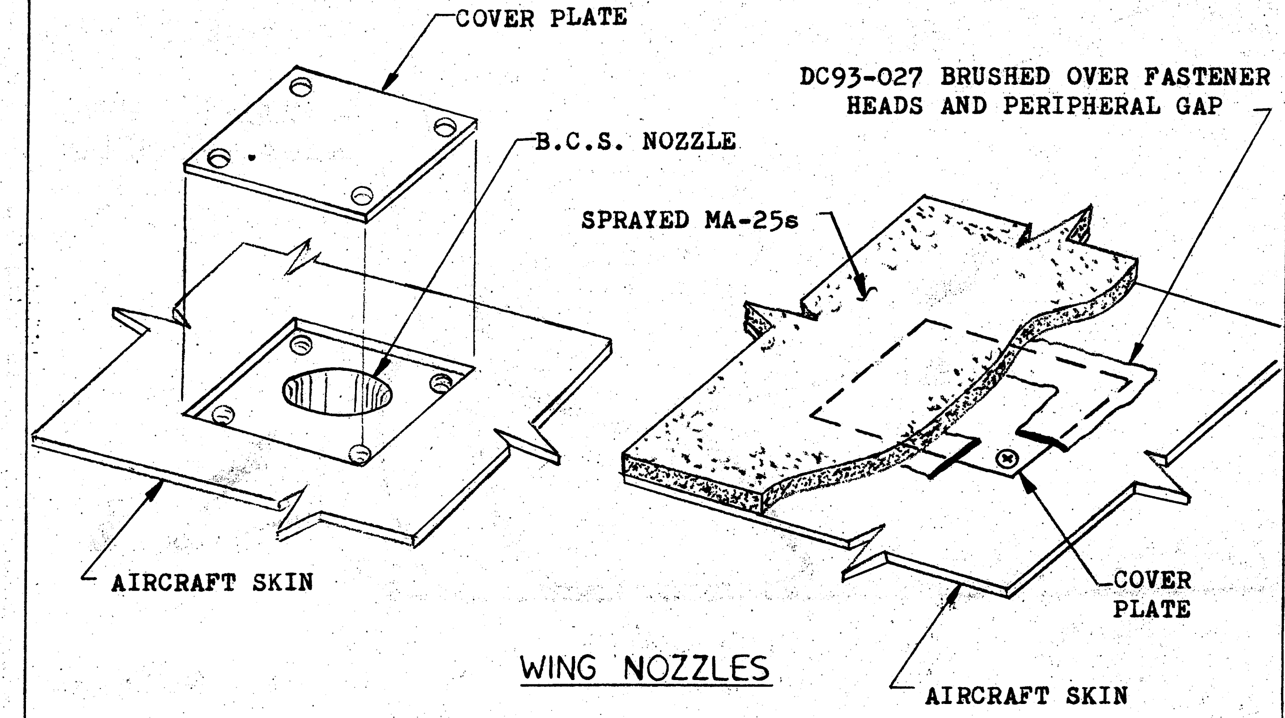

WING NOZZLES

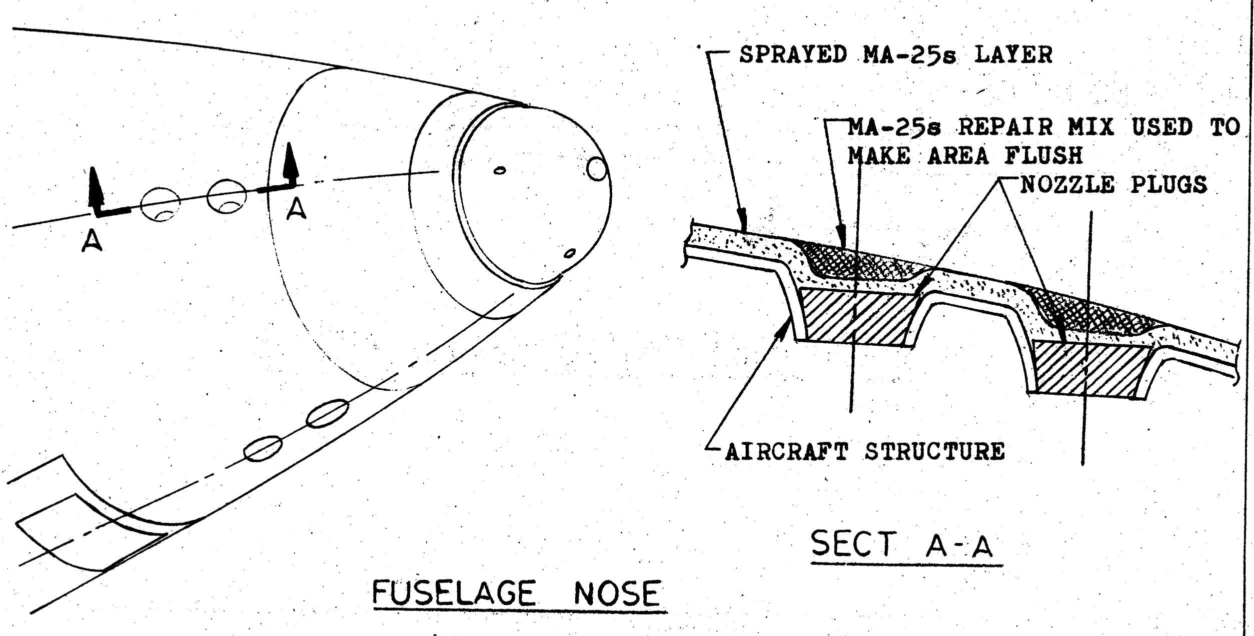

SECT A-A

FUSELAGE NOSE

B.C.S. NOZZLES

FIGURE IV-4

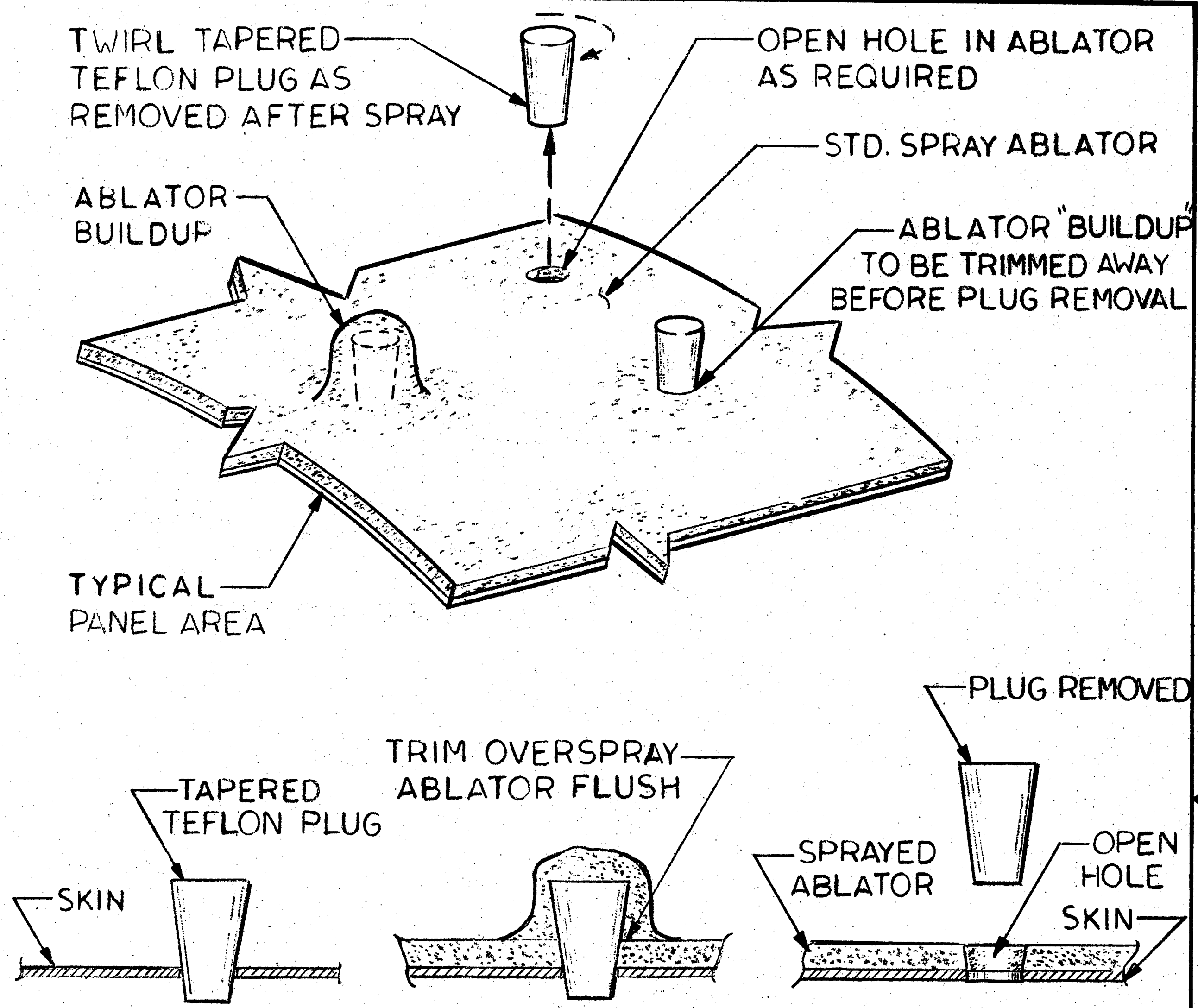

PLUG OPENINGS -REMOVE AFTER SPRAY

FIGURE IV - 5

REV	SIZE A	CODE IDENT NO. 38597	
	SCALE		SHEET

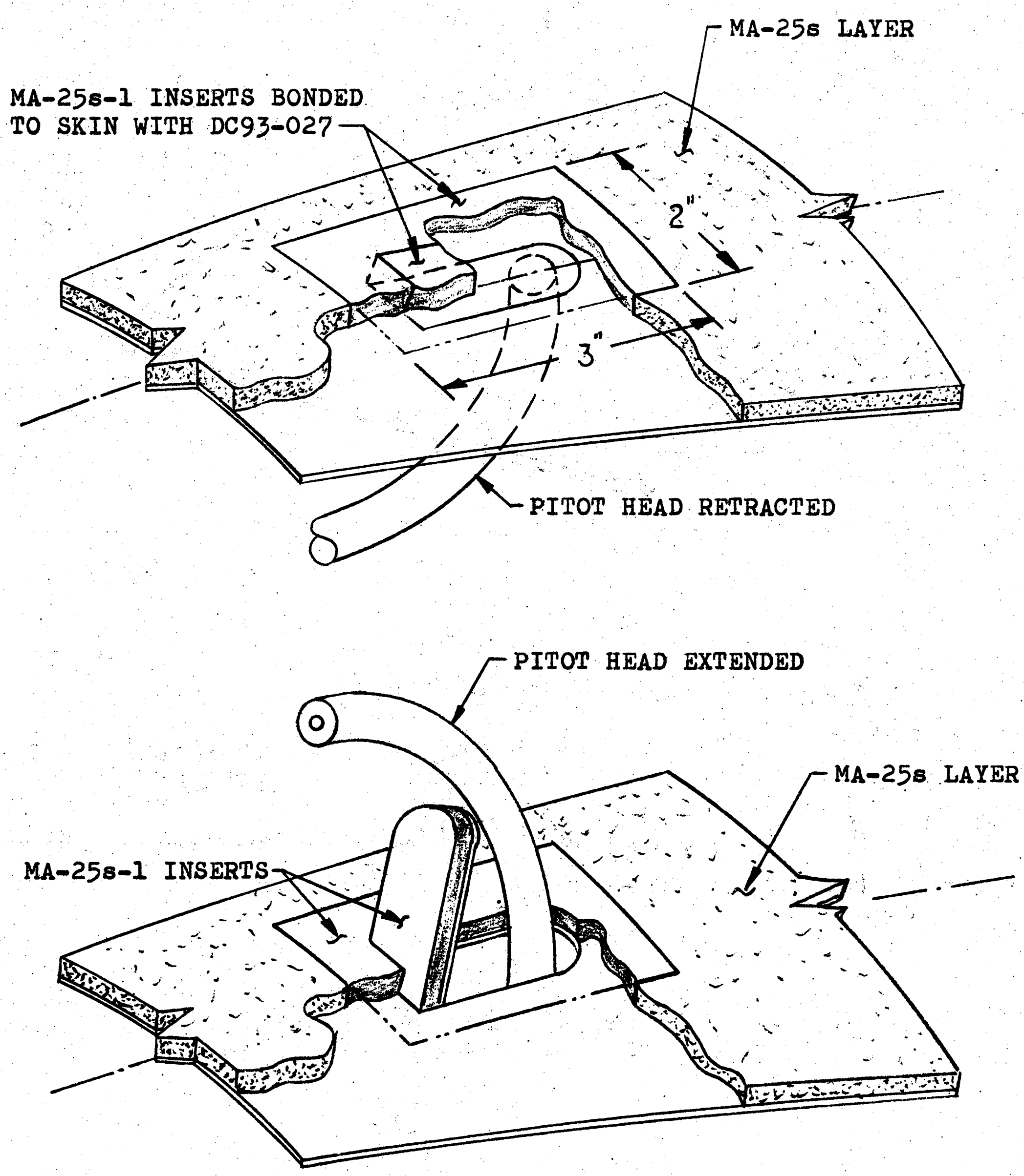

RETRACTABLE PITOT HEAD

FIGURE IV-6

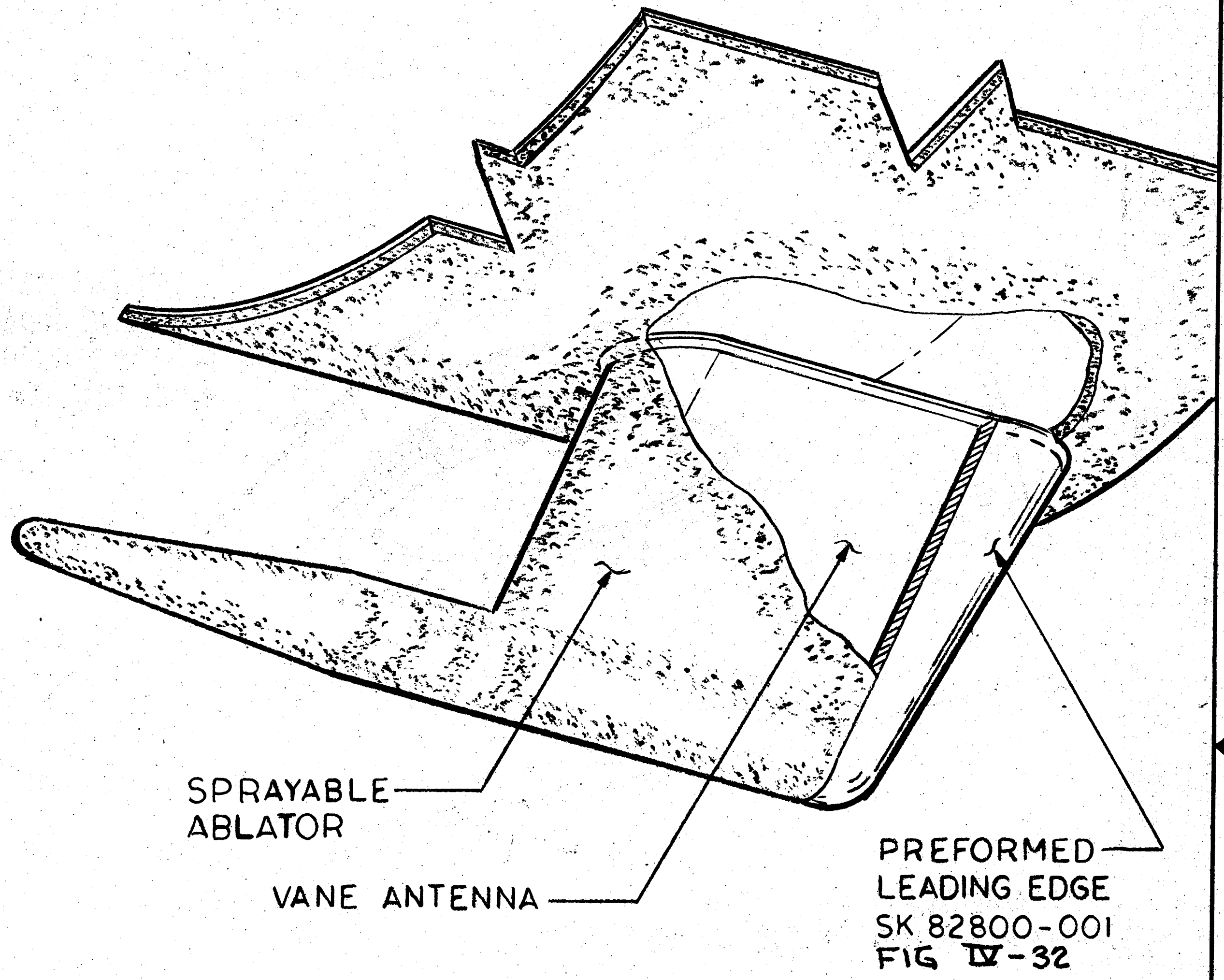

UHF ANTENNAS

FIGURE IV-7

REV	SIZE	CODE IDENT NO.	
	A	38597	
	SCALE		SHEET

Rev 1

FORM MM-1112A (12-65)

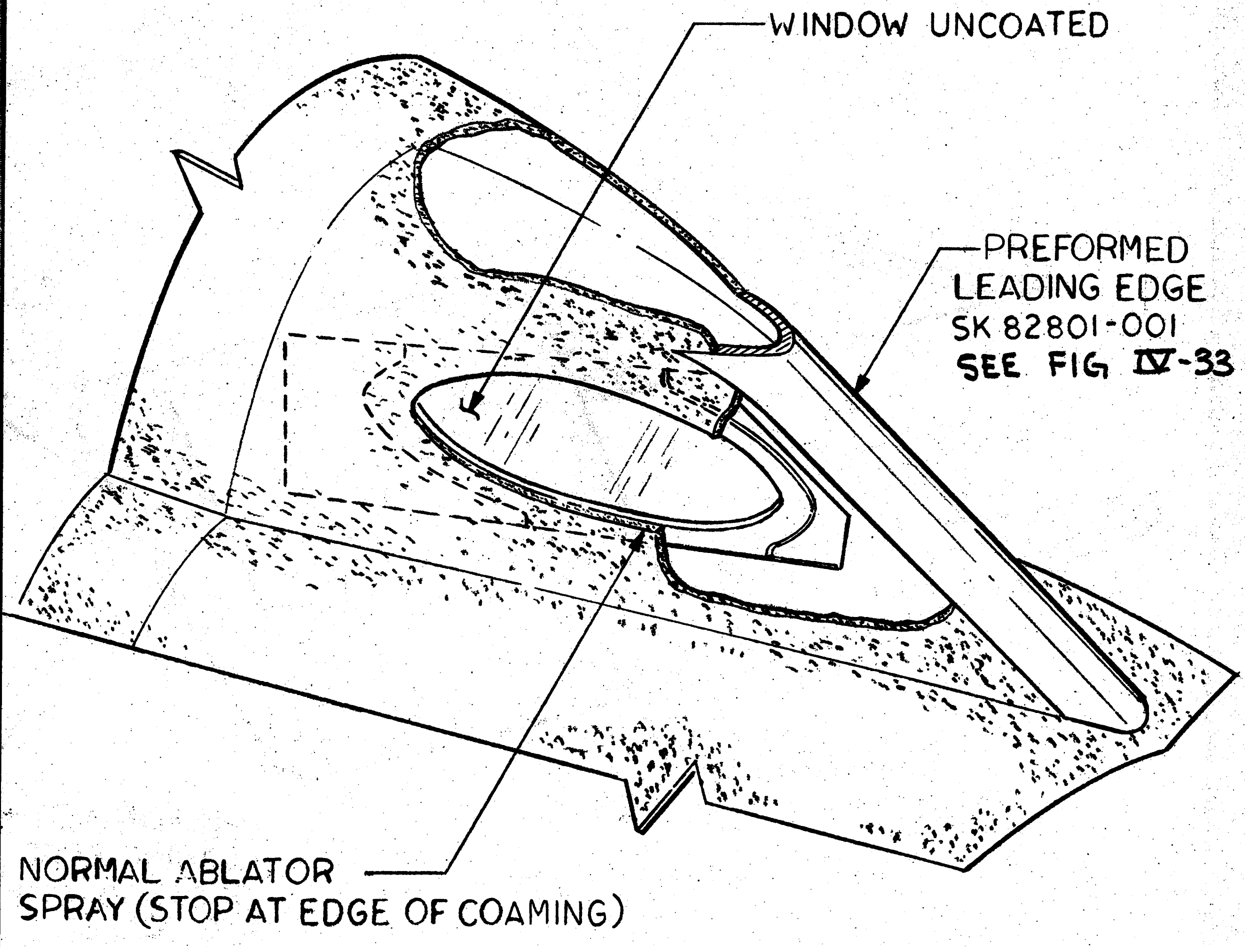

CANOPY WINDOW R.H. SIDE

FIGURE IV-8

	CODE IDENT NO.	SIZE	
CHG	38597	A	
	SCALE	SHEET	PAGE

Rev 1

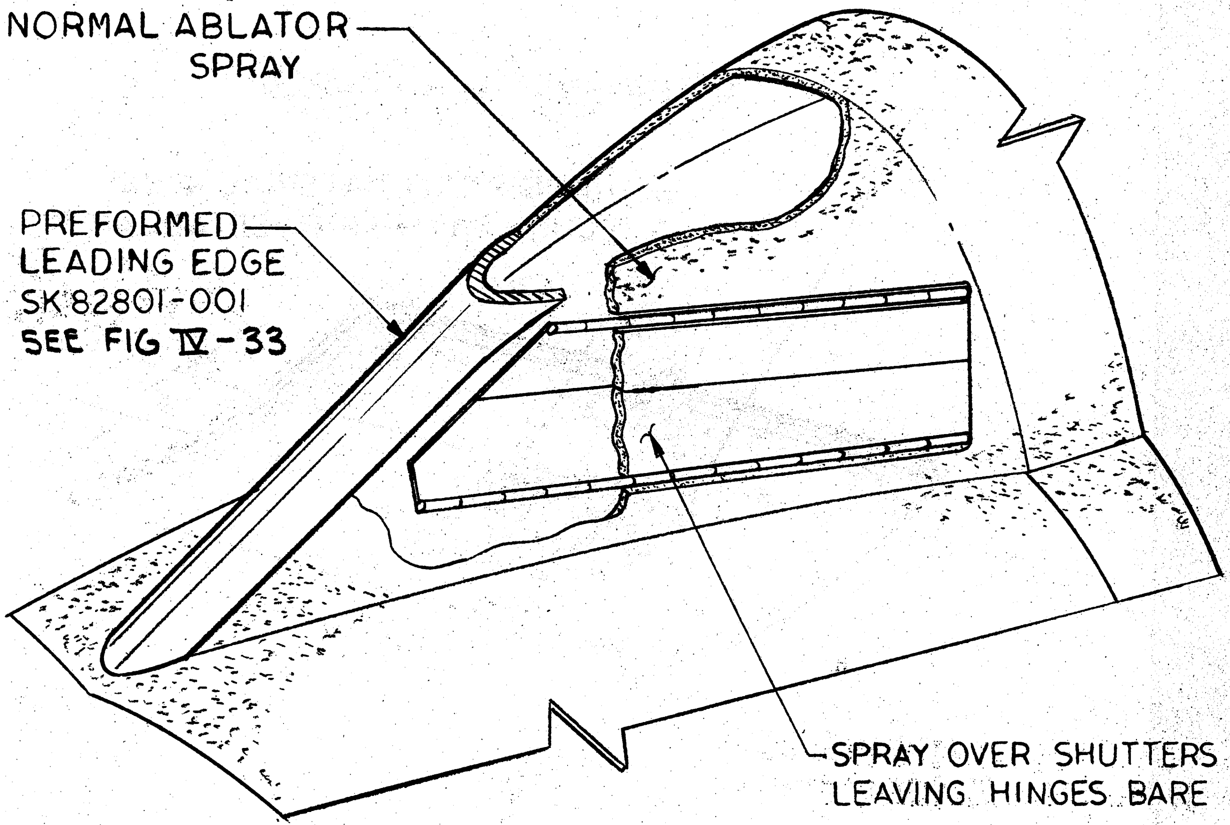

CANOPY WINDOW L.H.SIDE

FIGURE IV-9

CHG	CODE IDENT NO. 38597	SIZE A	
	SCALE	SHEET	PAGE

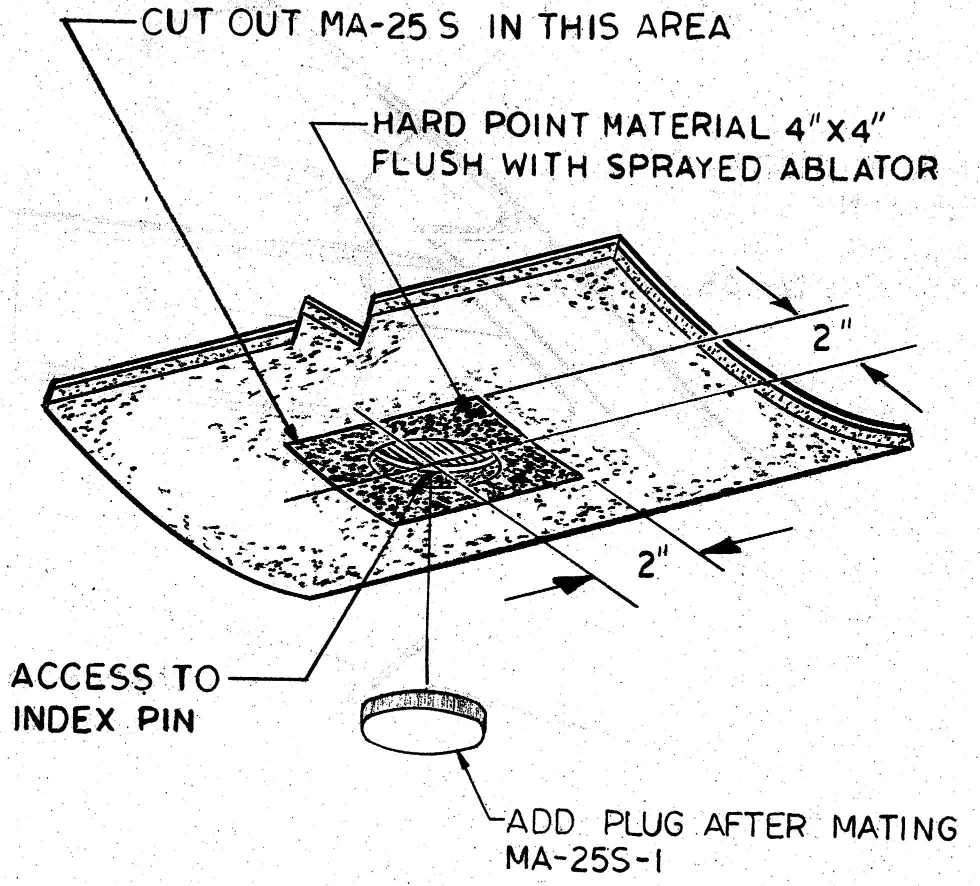

FWD. SUPPORT POINT

(JACKING PAD)

FIGURE IV-10

REV	SIZE A	CODE IDENT NO. 38597
SCALE		SHEET

ABLATOR SET BACK .25 INCH FROM RECEPTACLE EDGE EXCEPT AS SHOWN BELOW.

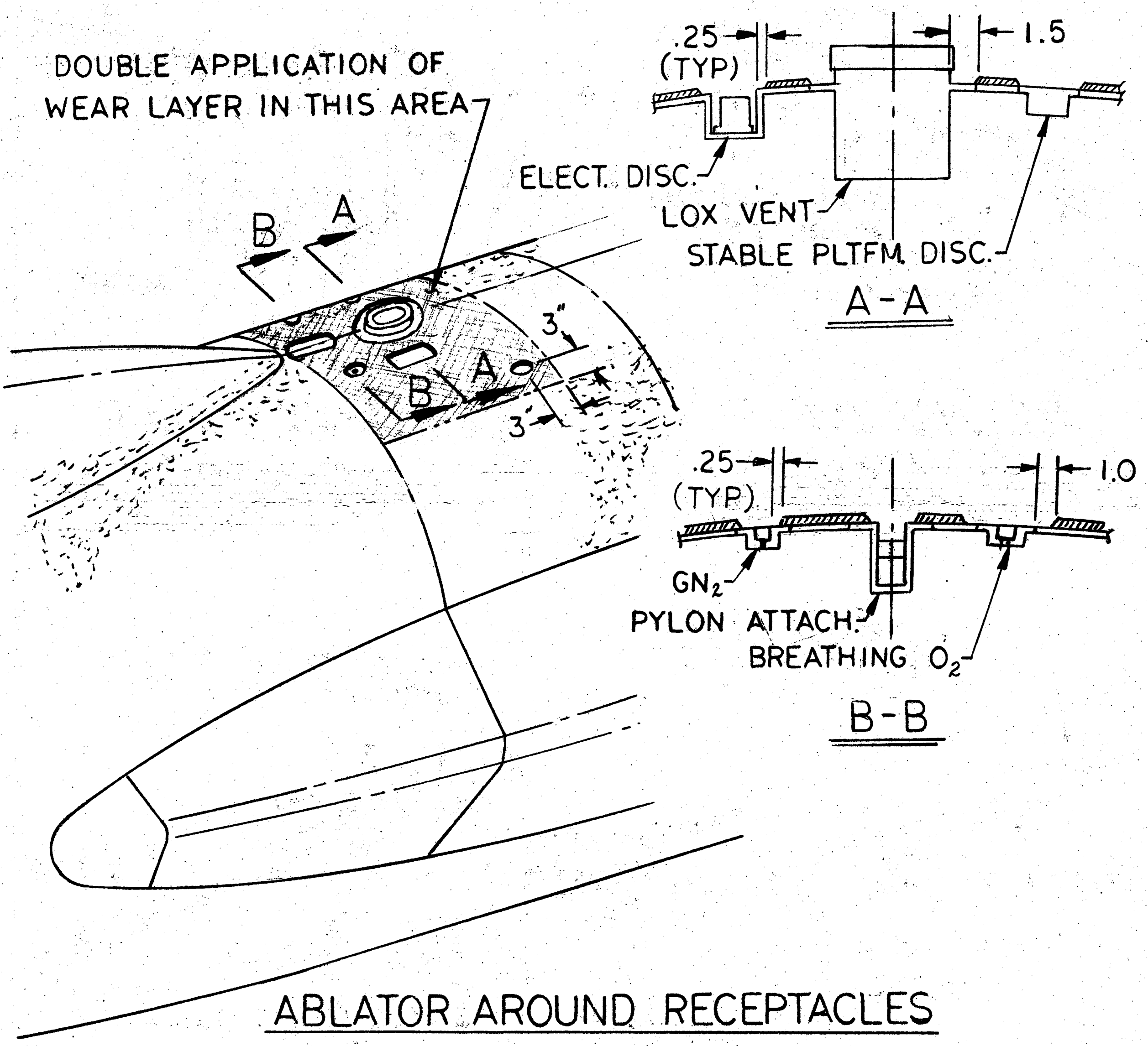

ABLATOR AROUND RECEPTACLES

FWD PYLON ATTACH.
GN$_2$ DISC.
BREATHING O$_2$ DISC.
ELECT. DISC.
STABLE PLTFM. DISC.

LOX VENT
TOP-OFF CONT. DISC.
HOT AIR DISC.
AFT JACKING RECEPT.
TRANSPORT DOLLY RECEPT.

FIGURE IV-11

REV	SIZE A	CODE IDENT NO. 38597
SCALE		SHEET

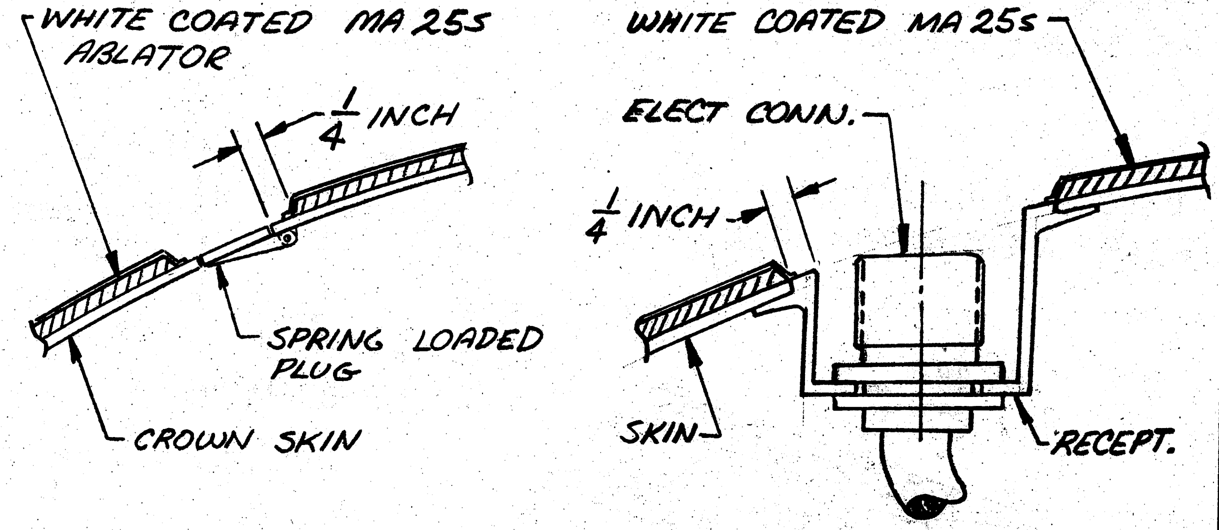

B52 HOT AIR DISCONNECT

EXTERNAL POWER DISCONNECT

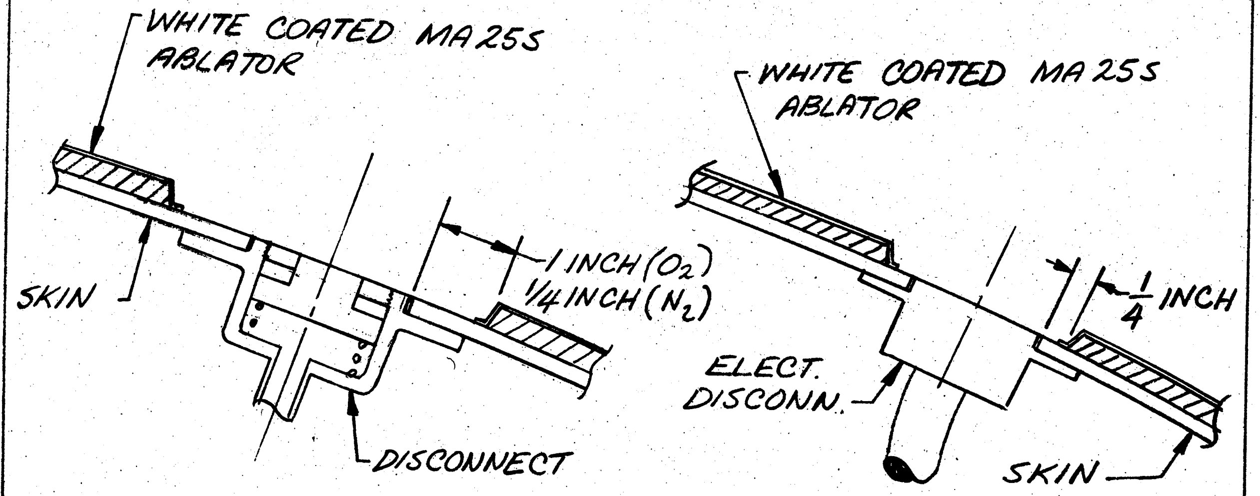

BREATHING OXYGEN & B-52 NITROGEN DISCONNECT

STABLE PLATFORM DISCONNECT

SYSTEM INTERFACE ABLATOR DESIGN

FIG IV-12

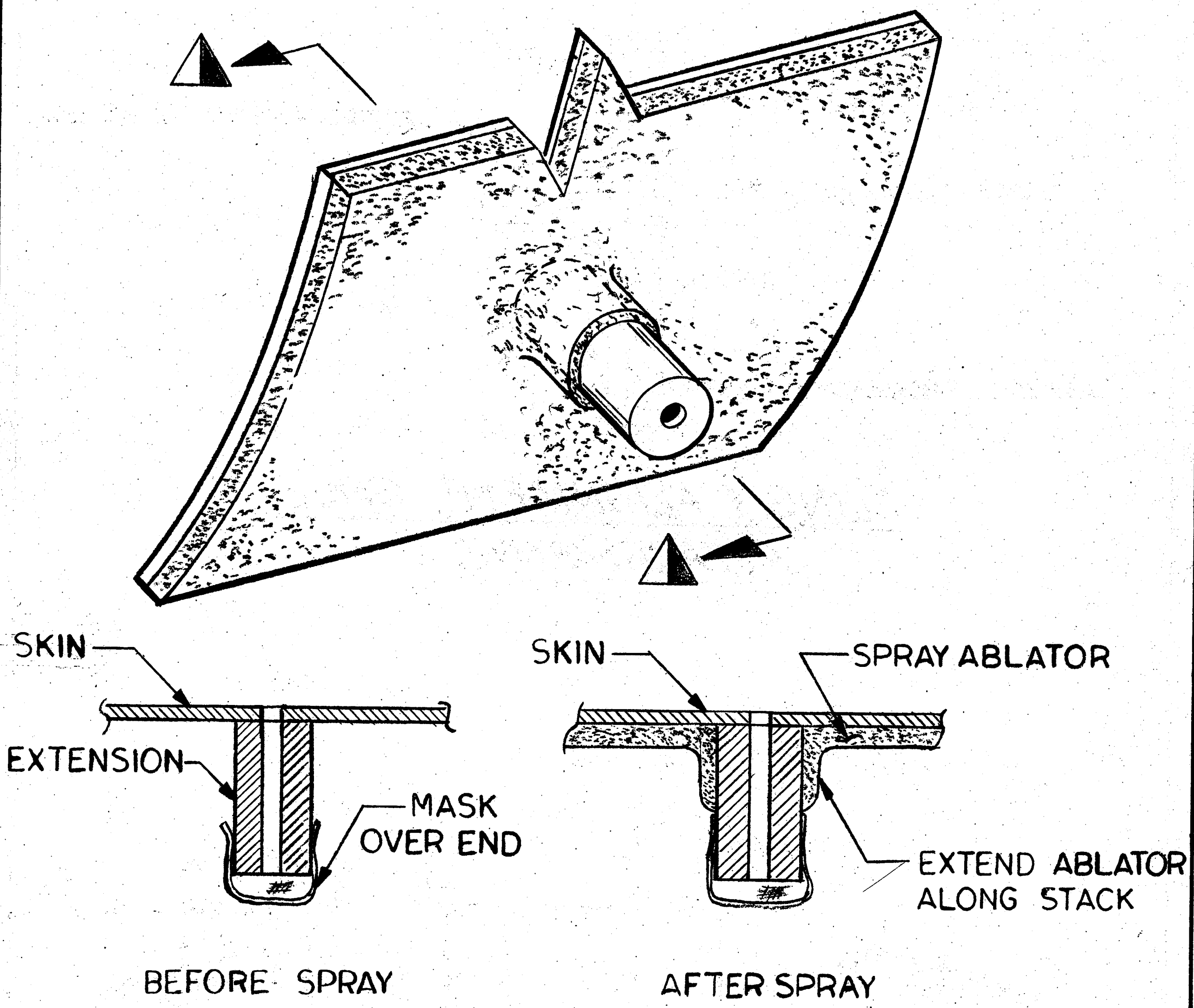

SECTION ◭

EXTENSIONS

1. HYDRAULIC RESERVOIR DRAIN
2. APU EXHAUST
3. APU COMPARTMENT DRAIN

FIGURE IV - 13

REV	SIZE A	CODE IDENT NO. 38597	
	SCALE		SHEET

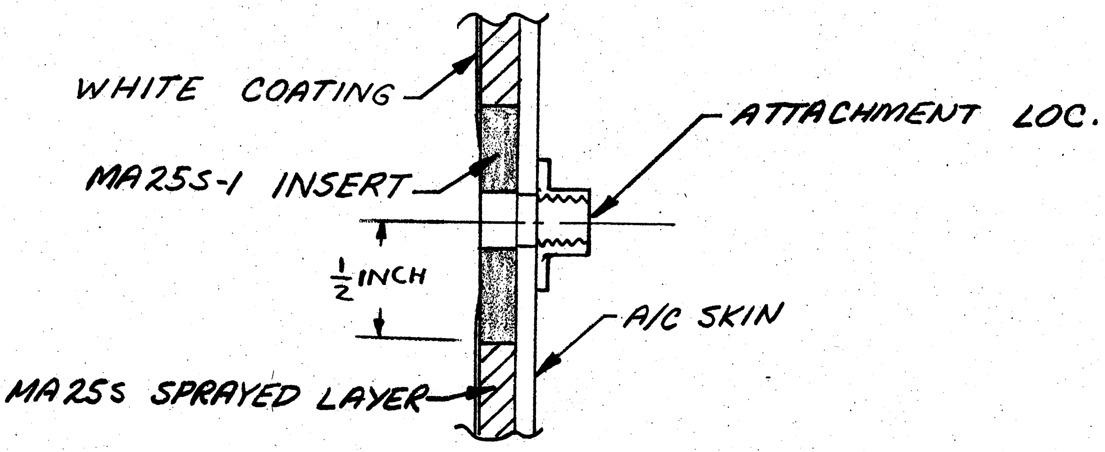

SLING & ALIGNMENT GAGE ATTACHMENTS

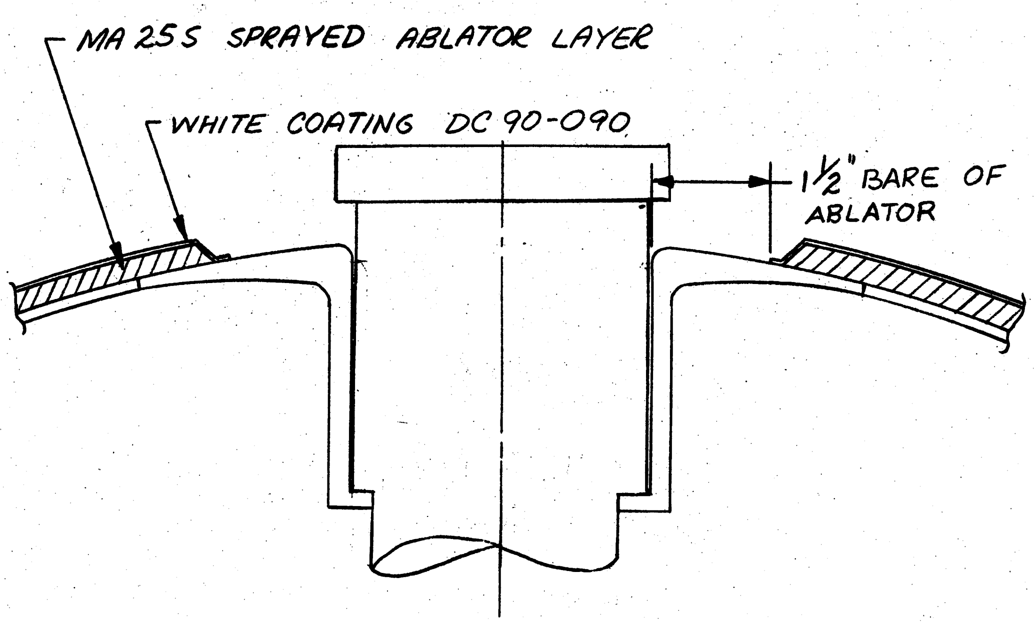

LOX VENT VALVE

TOP-OFF CONTROL SIMILAR

INTERFACE ABLATOR DESIGN

FIGURE IV-14

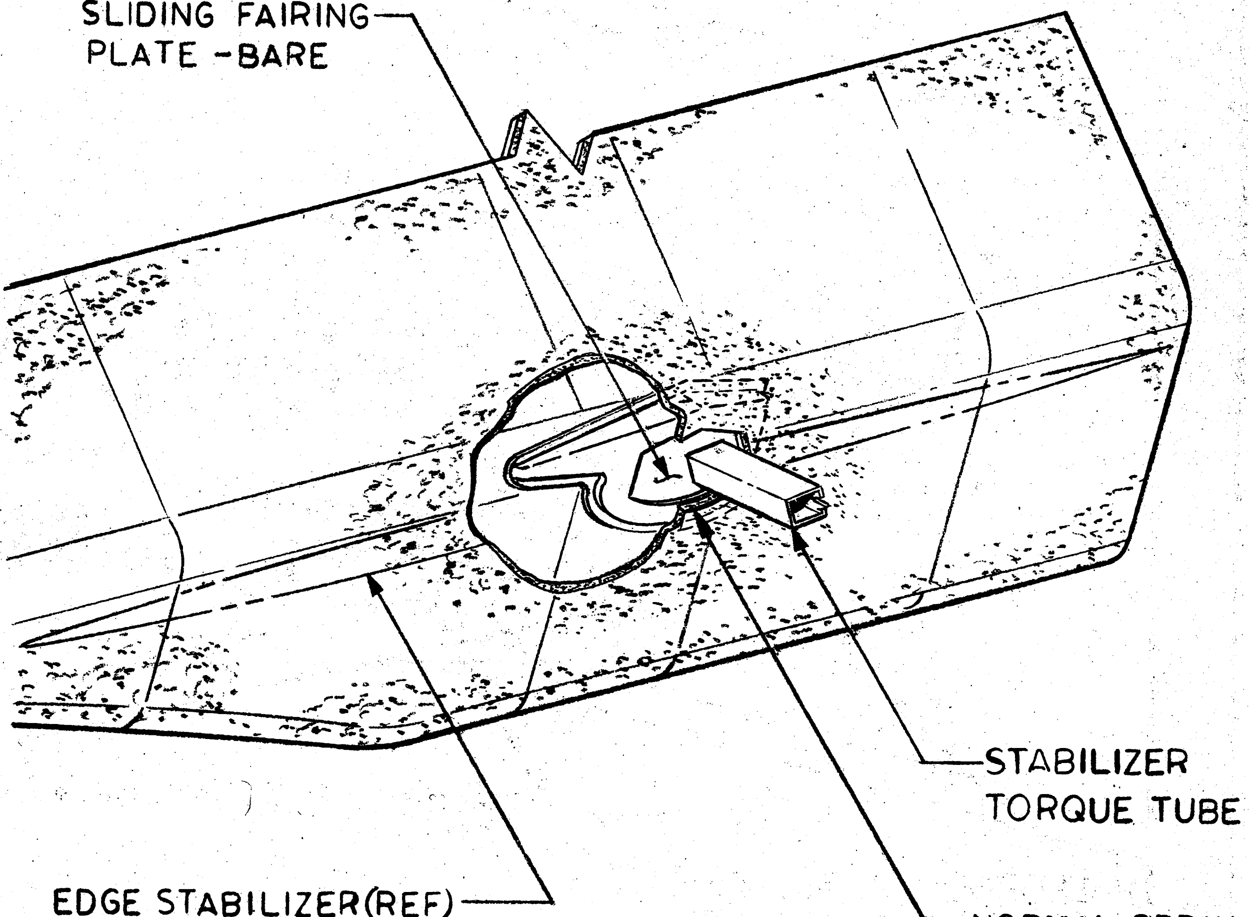

TORQUE TUBE SEAL

FIGURE IV-15

REV	SIZE A	CODE IDENT NO. 38597	
	SCALE		SHEET

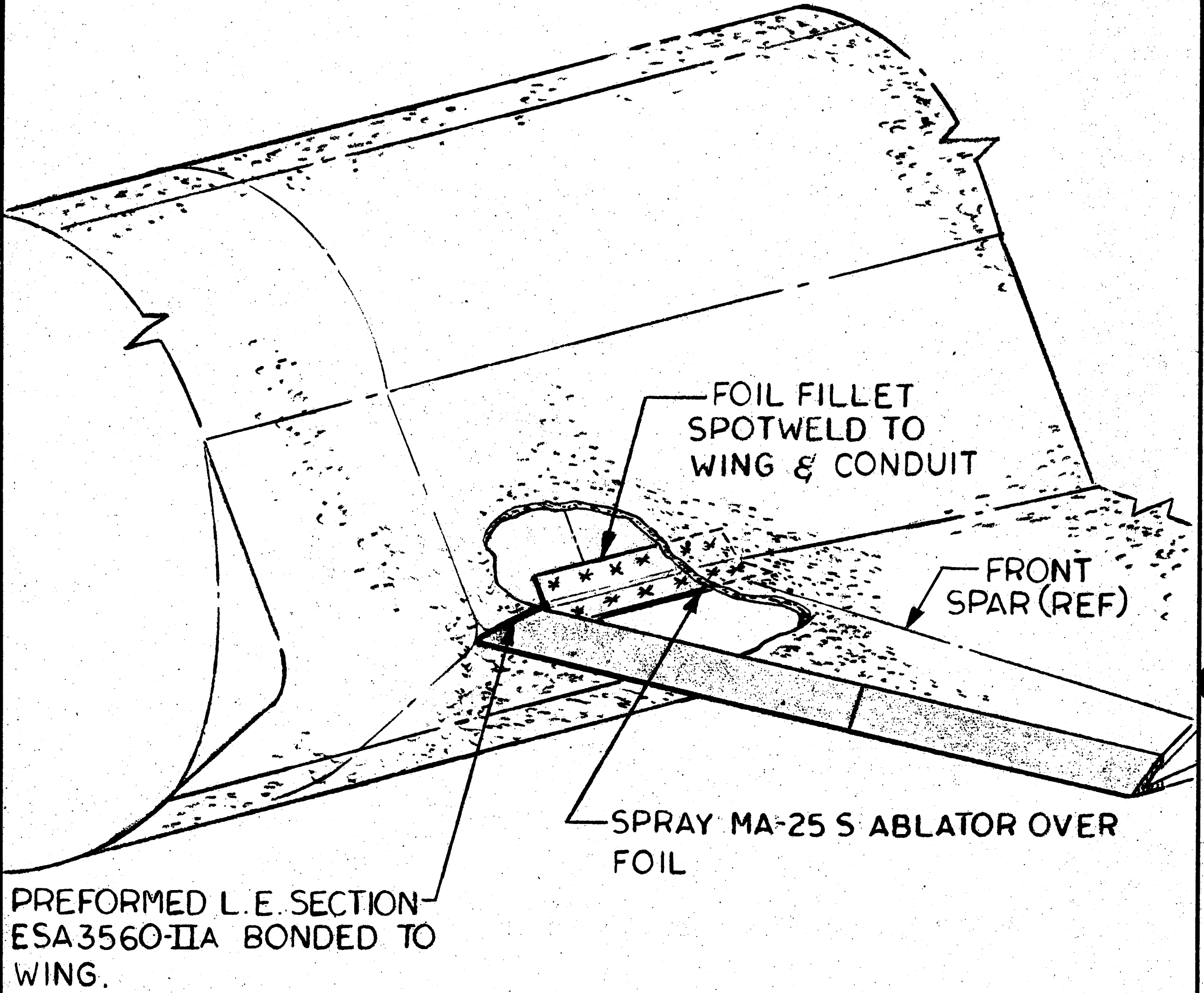

GAP COVER

WING TO FUSELAGE JOINT.

FIGURE IV-16

CHG	CODE IDENT NO. 38597	SIZE A	
	SCALE	SHEET	PAGE

ABLATOR DESIGN PANEL EDGES

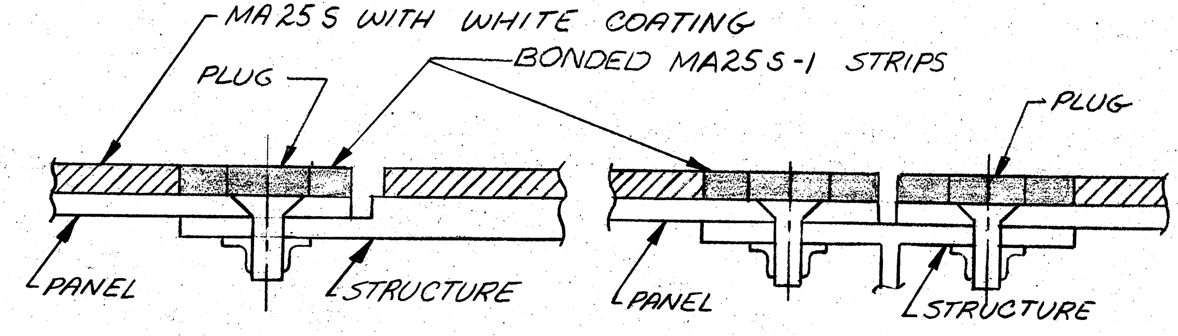

SERVICE PANEL EDGE

SERVICE PANEL JUNCTION

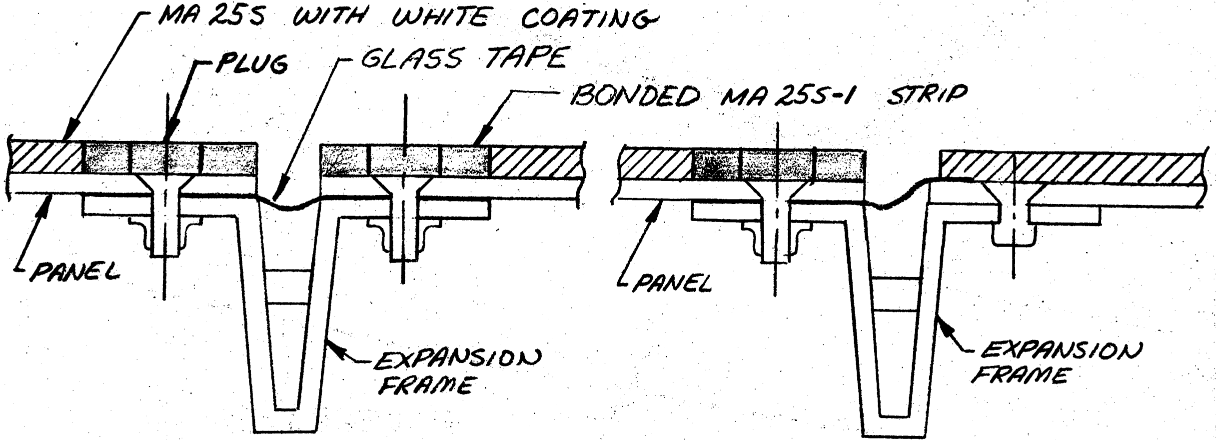

SERVICE PANEL EXPANSION JUNCTION

SERVICE PANEL EXPANSION EDGE

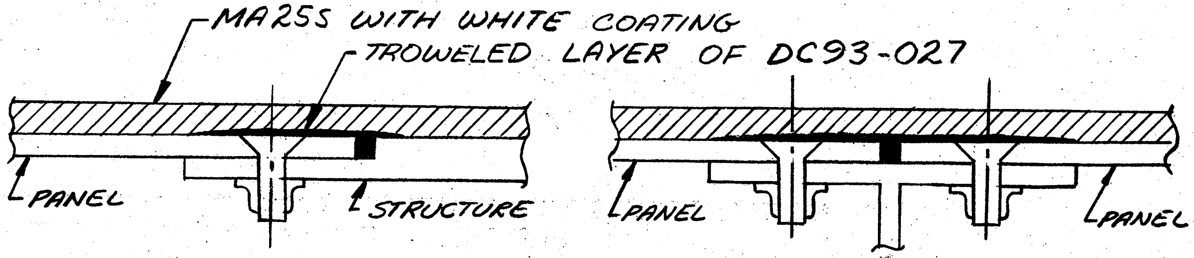

NON-SERVICE PANEL EDGE

NON-SERVICE PANEL JUNCTION

FIGURE IV-17

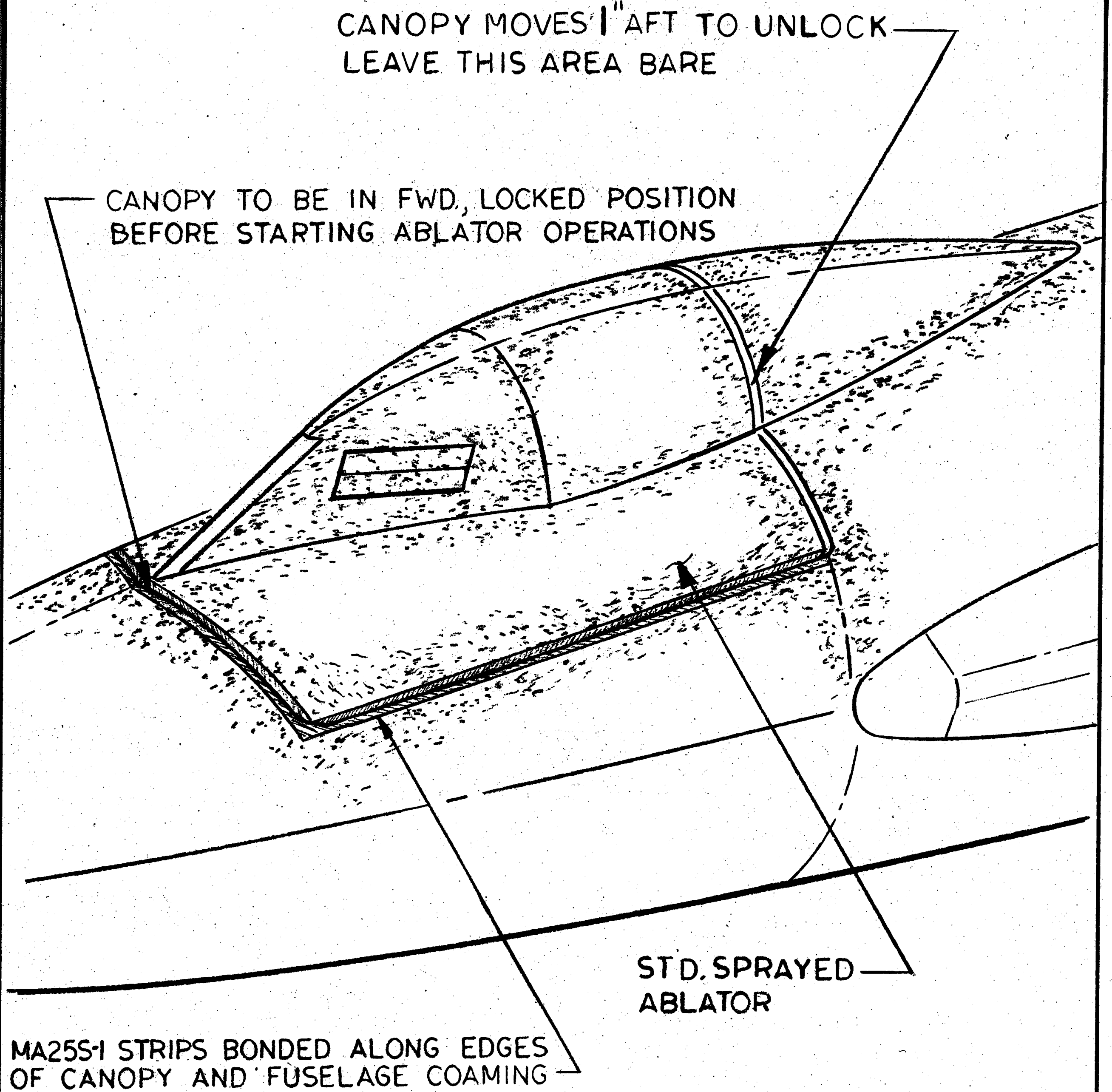

CANOPY MOVES 1" AFT TO UNLOCK
LEAVE THIS AREA BARE

CANOPY TO BE IN FWD, LOCKED POSITION
BEFORE STARTING ABLATOR OPERATIONS

STD. SPRAYED
ABLATOR

MA25S-1 STRIPS BONDED ALONG EDGES
OF CANOPY AND FUSELAGE COAMING

CANOPY-PERIPHERY

FIGURE IV 18

CHG	CODE IDENT NO. 38597	SIZE A	
	SCALE	SHEET	PAGE

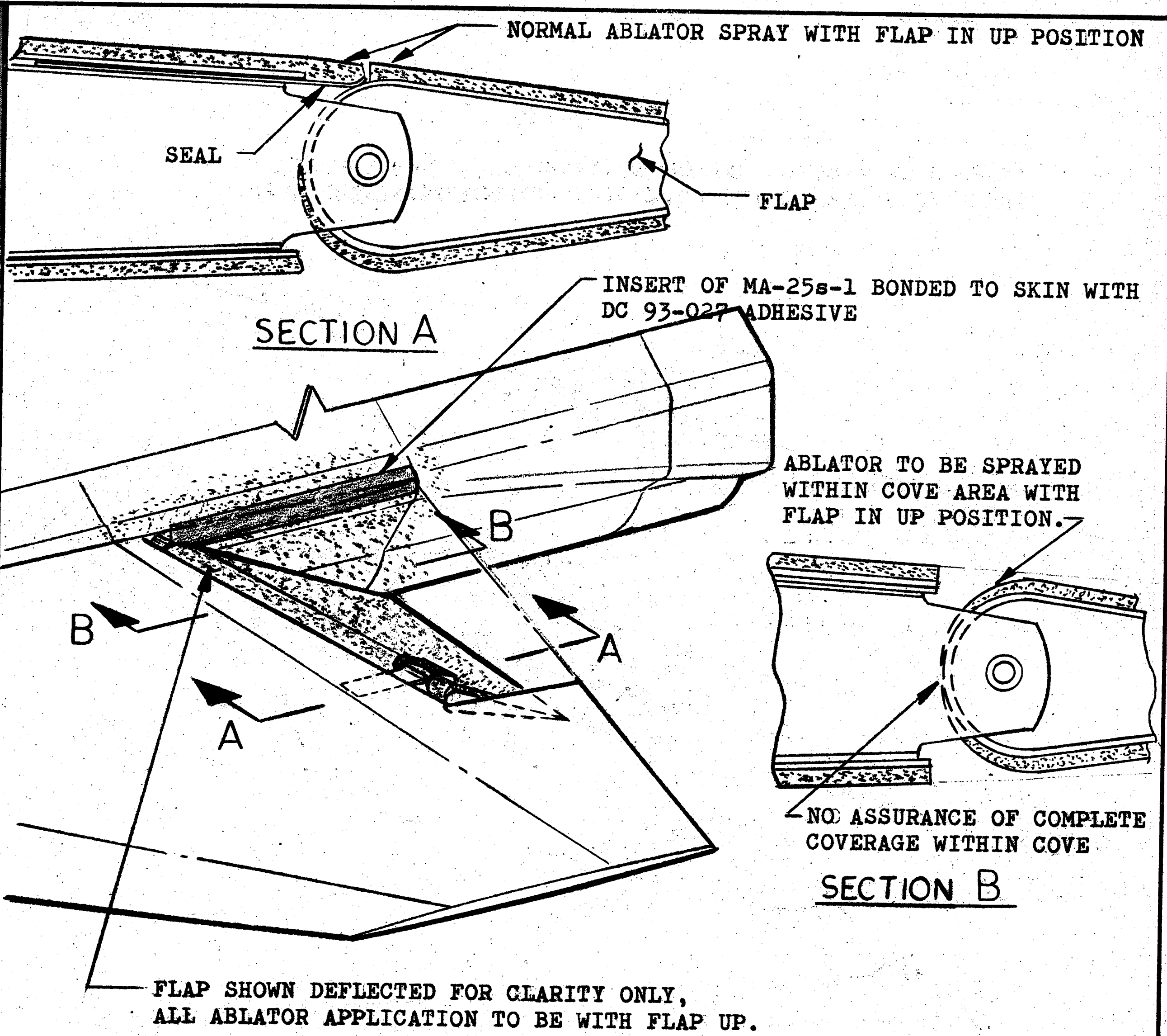

FLAP ABLATOR APPLICATION

FIGURE IV-19

CHG	CODE IDENT NO. 38597	SIZE A	
	SCALE	SHEET	PAGE

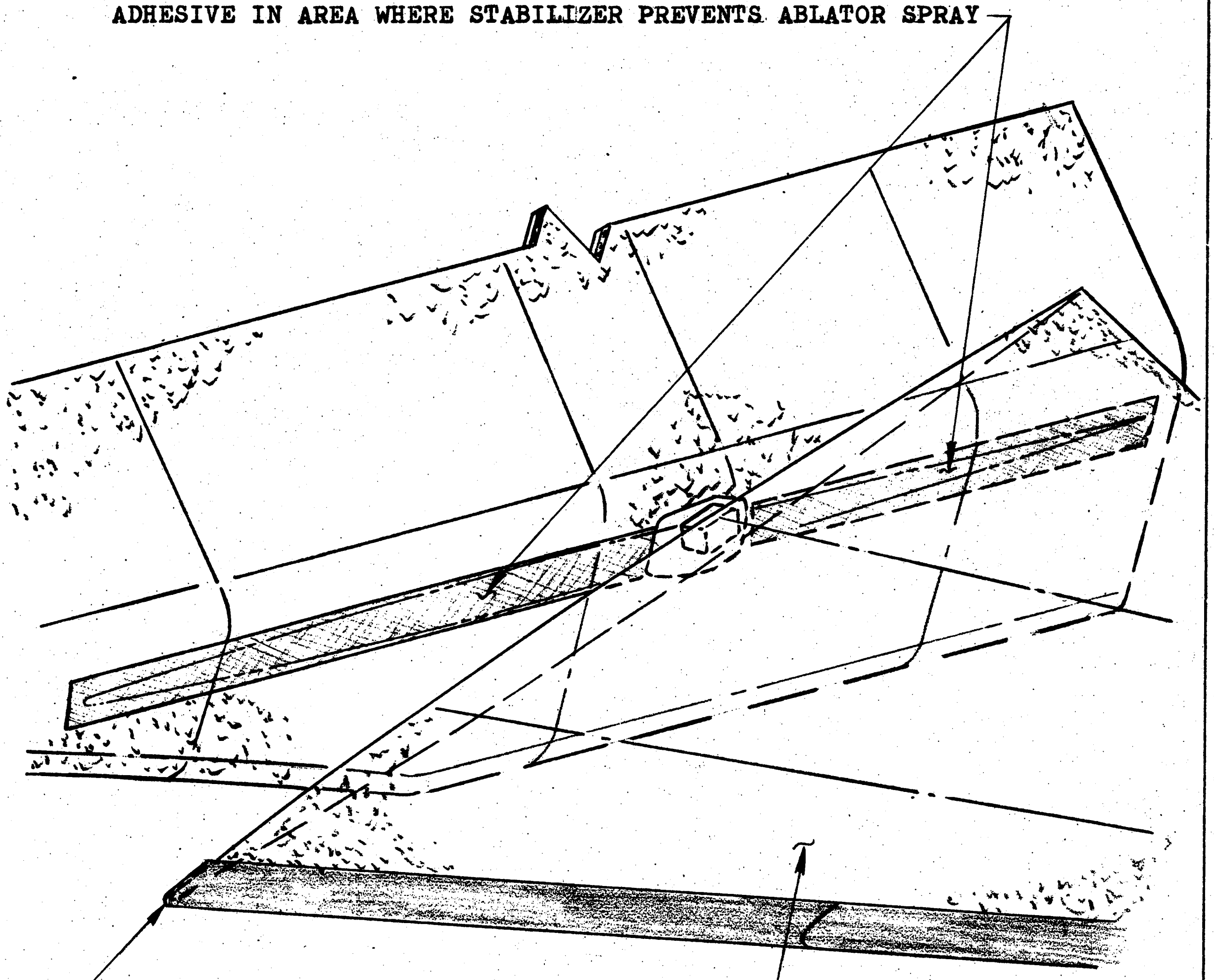

INSERTS OF MA-25s-1 BONDED TO FUSELAGE WITH DC93-027 ADHESIVE IN AREA WHERE STABILIZER PREVENTS ABLATOR SPRAY

EXTEND MOLDED LEADING EDGE SECTION INBOARD 3/16 INCH PAST SKIN EDGE

MA-25s SPRAYED ABLATOR

NOTE: STABILIZER SHOWN IN DEFLECTED ATTITUDE FOR CLARITY ONLY. ALL ABLATOR APPLICATION TO BE WITH STABILIZER IN HORIZONTAL POSITION.

STABILIZER TO FUSELAGE GAP REDUCTION

FIGURE IV-20

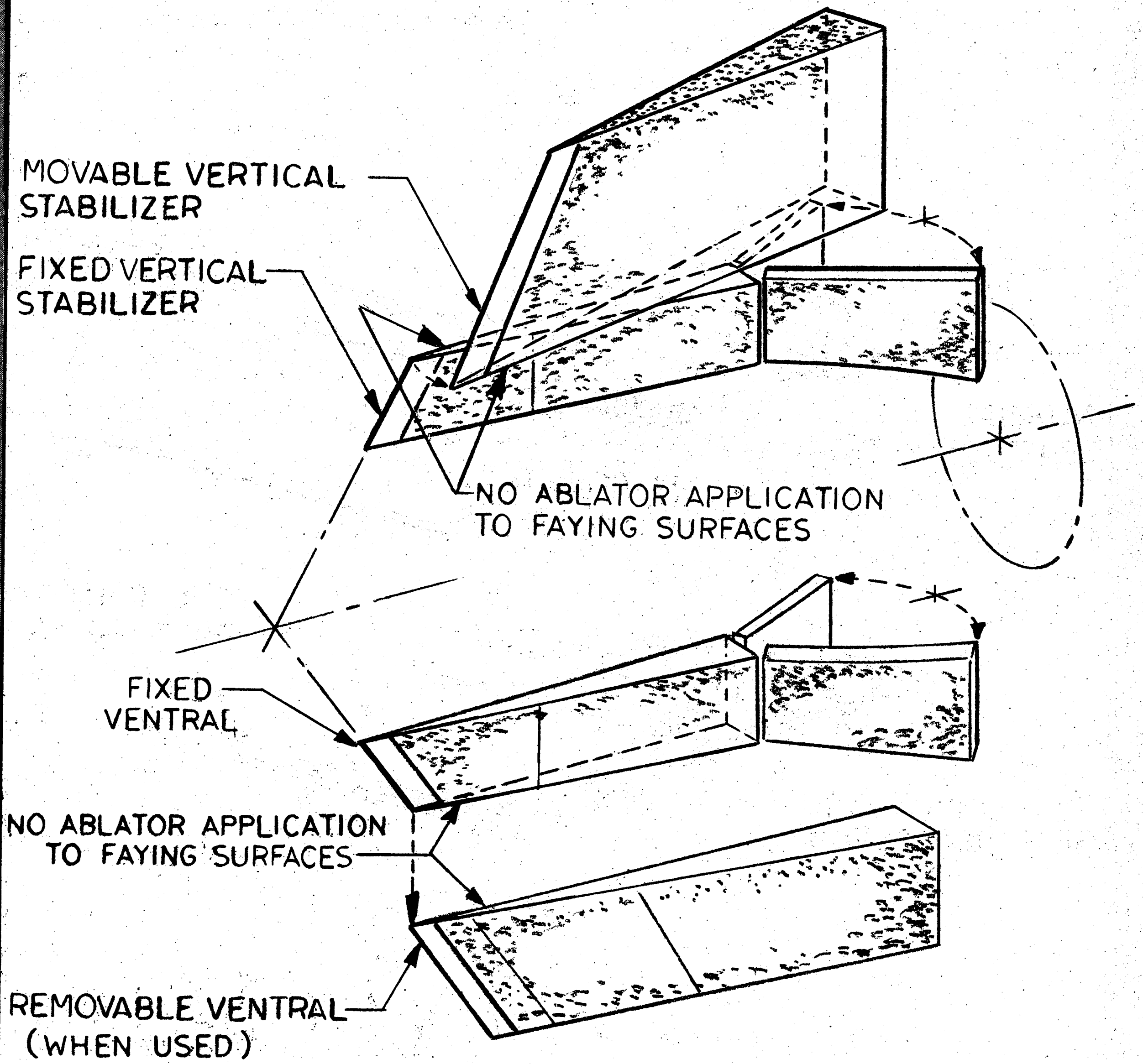

VERTICAL STABILIZER & SPEED BRAKES

FIGURE IV-21

CHG	CODE IDENT NO.	SIZE	
	38597	A	
	SCALE	SHEET	PAGE

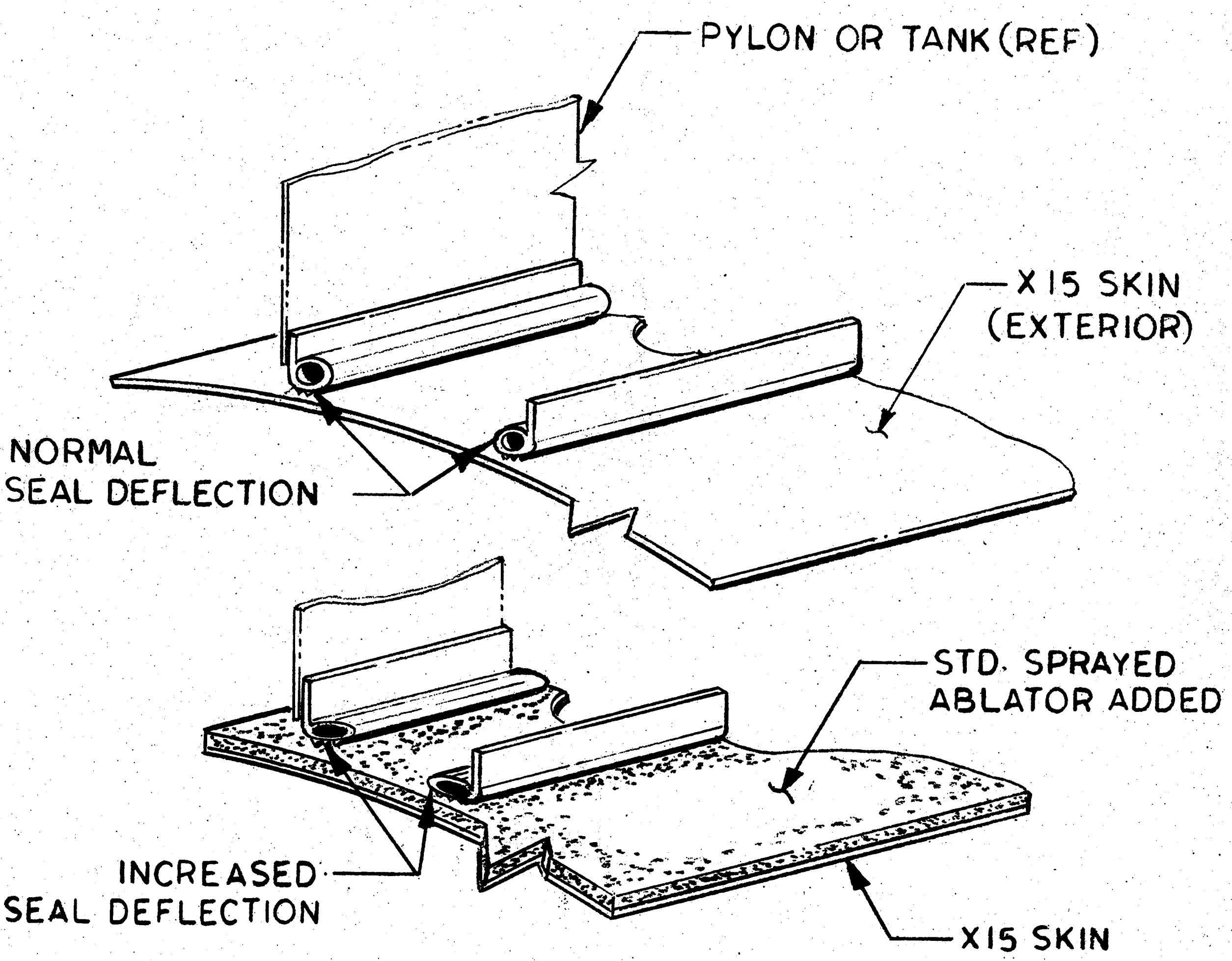

INCREASED SEAL DEFLECTION CHECK

1. EXTERNAL TANK ATTACHING POINT
2. B 52 PYLON ATTACHING POINT

FIGURE IV-22

REV	SIZE A	CODE IDENT NO. 38597	
	SCALE		SHEET

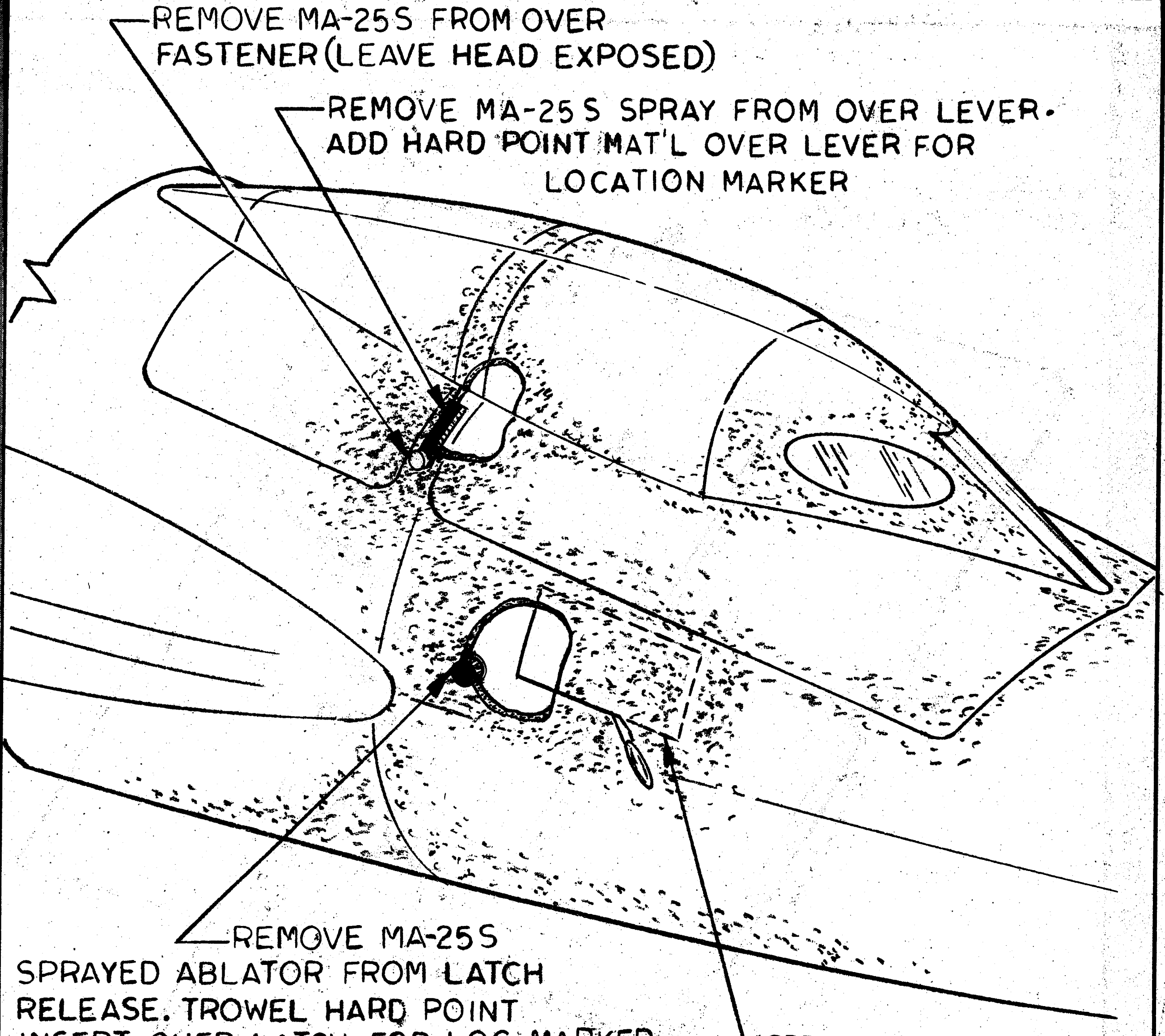

REMOVE MA-25S FROM OVER FASTENER (LEAVE HEAD EXPOSED)

REMOVE MA-25S SPRAY FROM OVER LEVER. ADD HARD POINT MAT'L OVER LEVER FOR LOCATION MARKER

REMOVE MA-25S SPRAYED ABLATOR FROM LATCH RELEASE. TROWEL HARD POINT INSERT OVER LATCH FOR LOC. MARKER

SPRAY MA 25S OVER DOOR & CUT AROUND PERIPHERY USING NON METALLIC TOOL

EXTERNAL CANOPY RELEASE & TUBE CUTTING LEVER

FIGURE IV-23

CHG	CODE IDENT NO. 38597	SIZE A	
	SCALE	SHEET	PAGE

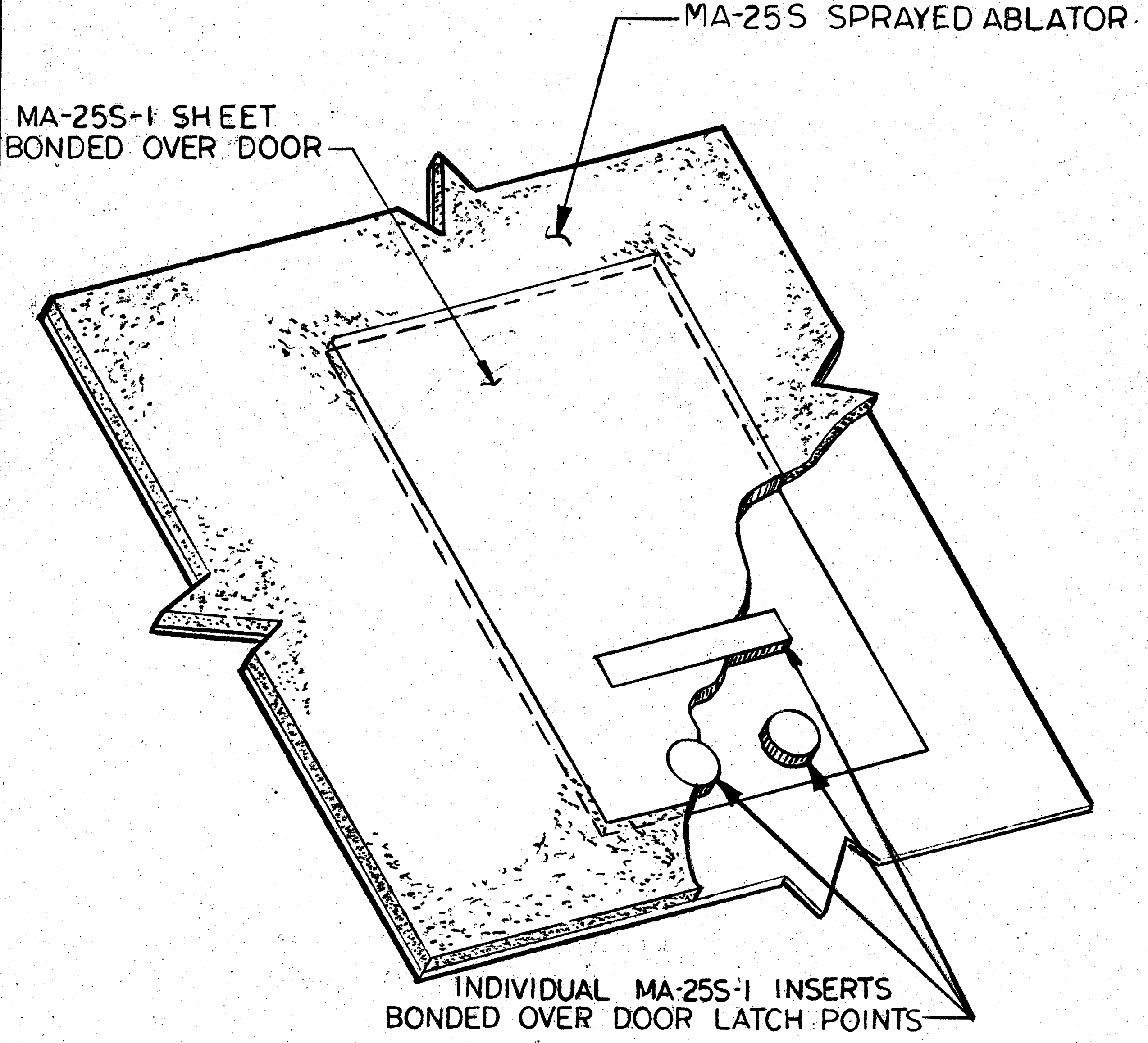

ENGINE COMPARTMENT FIRE DOORS

FIGURE IV-24

CHG	CODE IDENT NO. 38597	SIZE A	
	SCALE	SHEET	PAGE

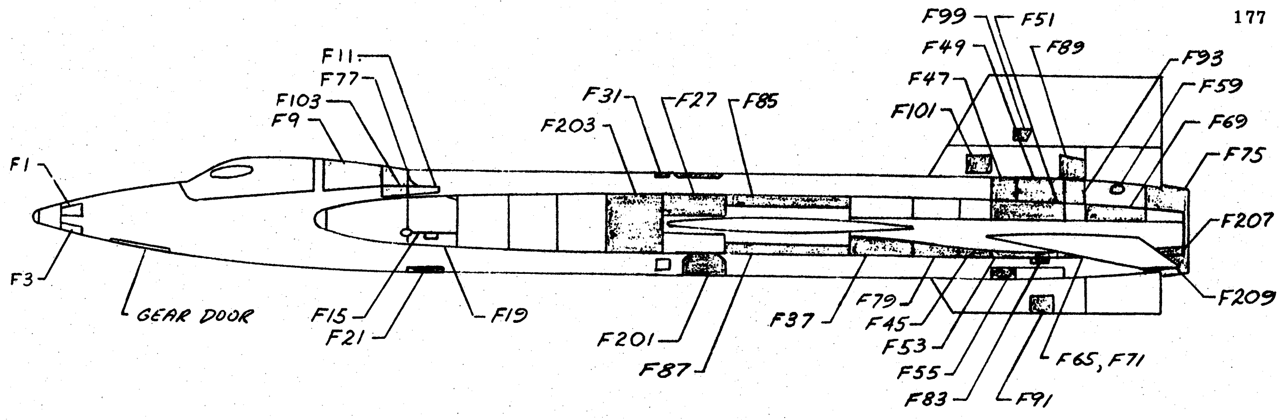

LEFT SIDE

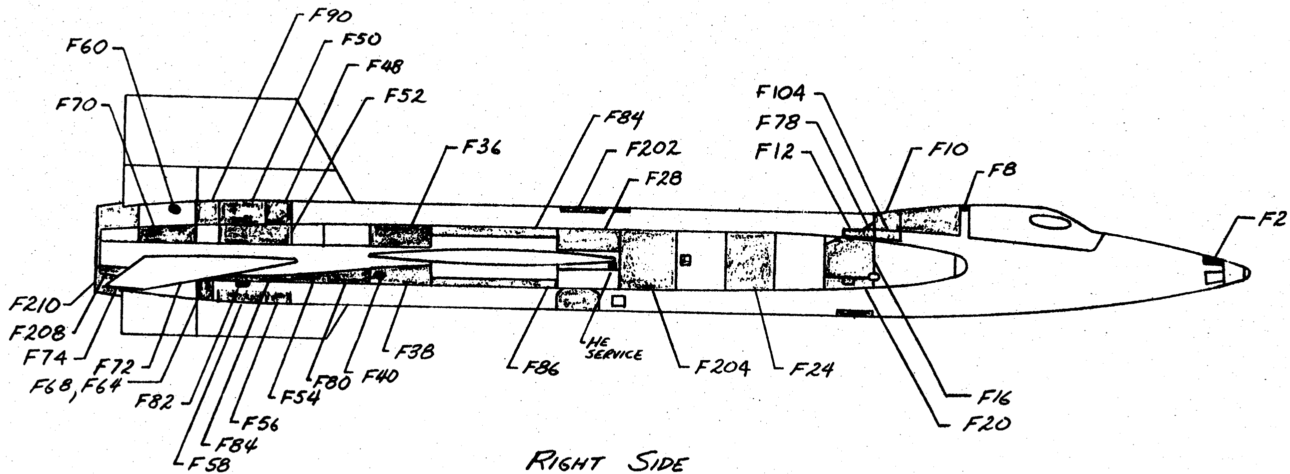

RIGHT SIDE

PRIMARY ACCESS REQUIREMENTS
X-15-2 AIRCRAFT
FIGURE IV-25

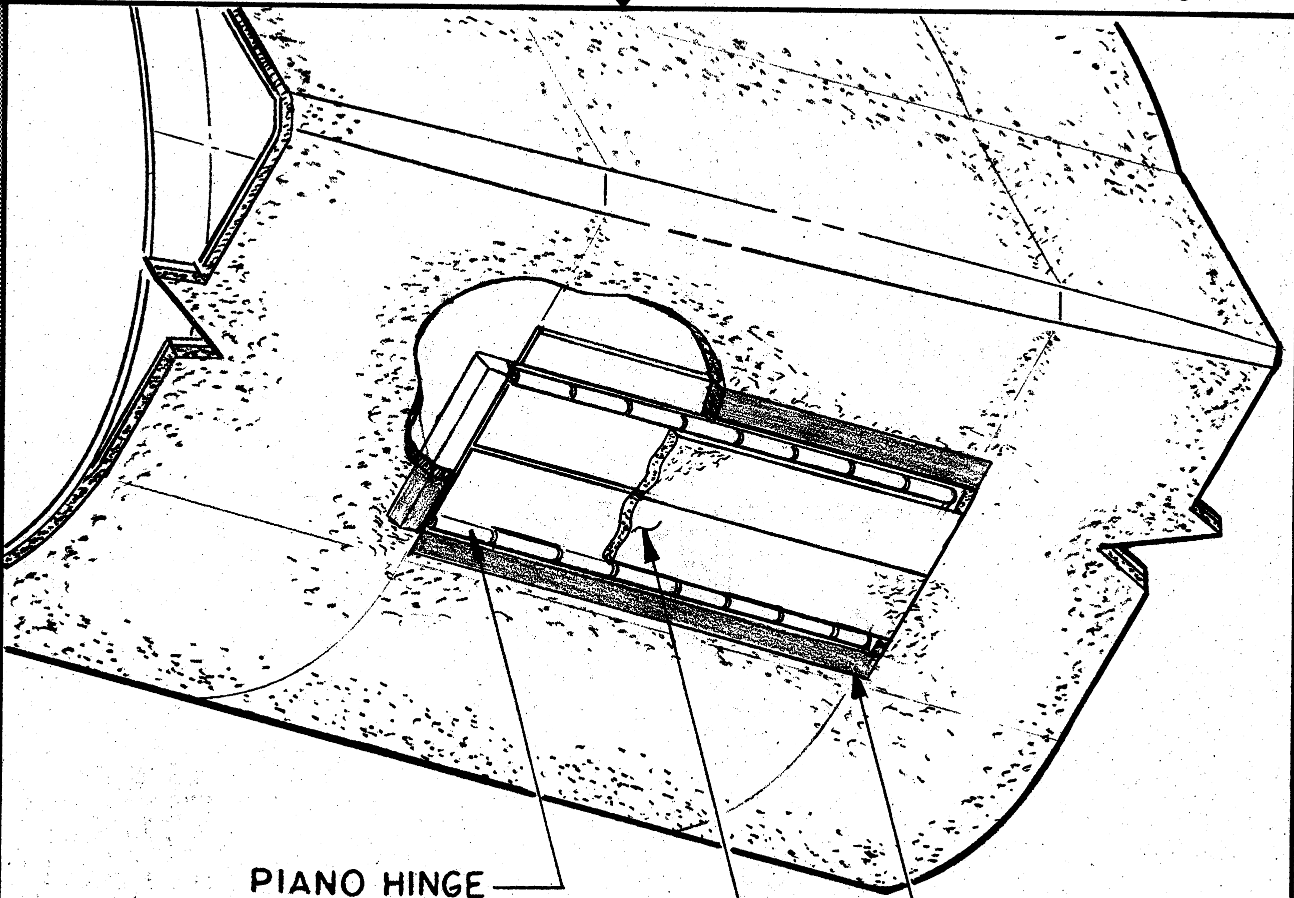

EXTERNAL TANK DISCONNECT DOORS

FIGURE IV-26

REV	SIZE A	CODE IDENT NO. 38597	
	SCALE		SHEET

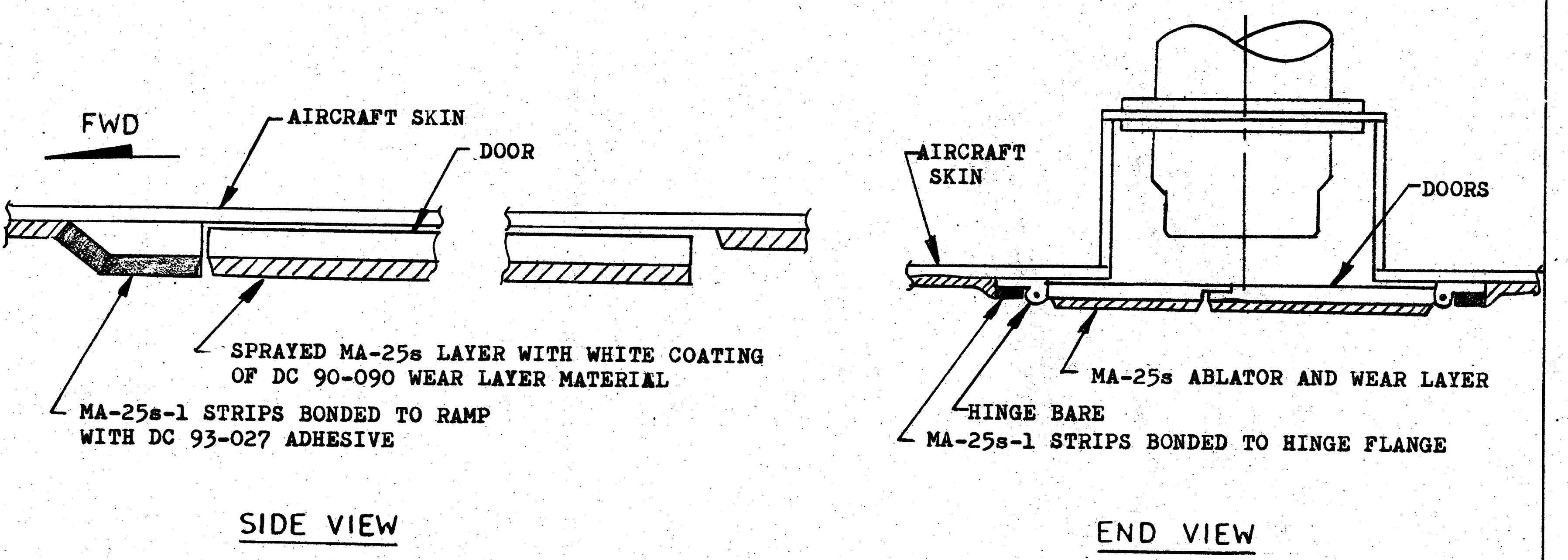

SIDE VIEW

END VIEW

DROP TANK PANEL
ABLATOR DESIGN

FIGURE IV-27

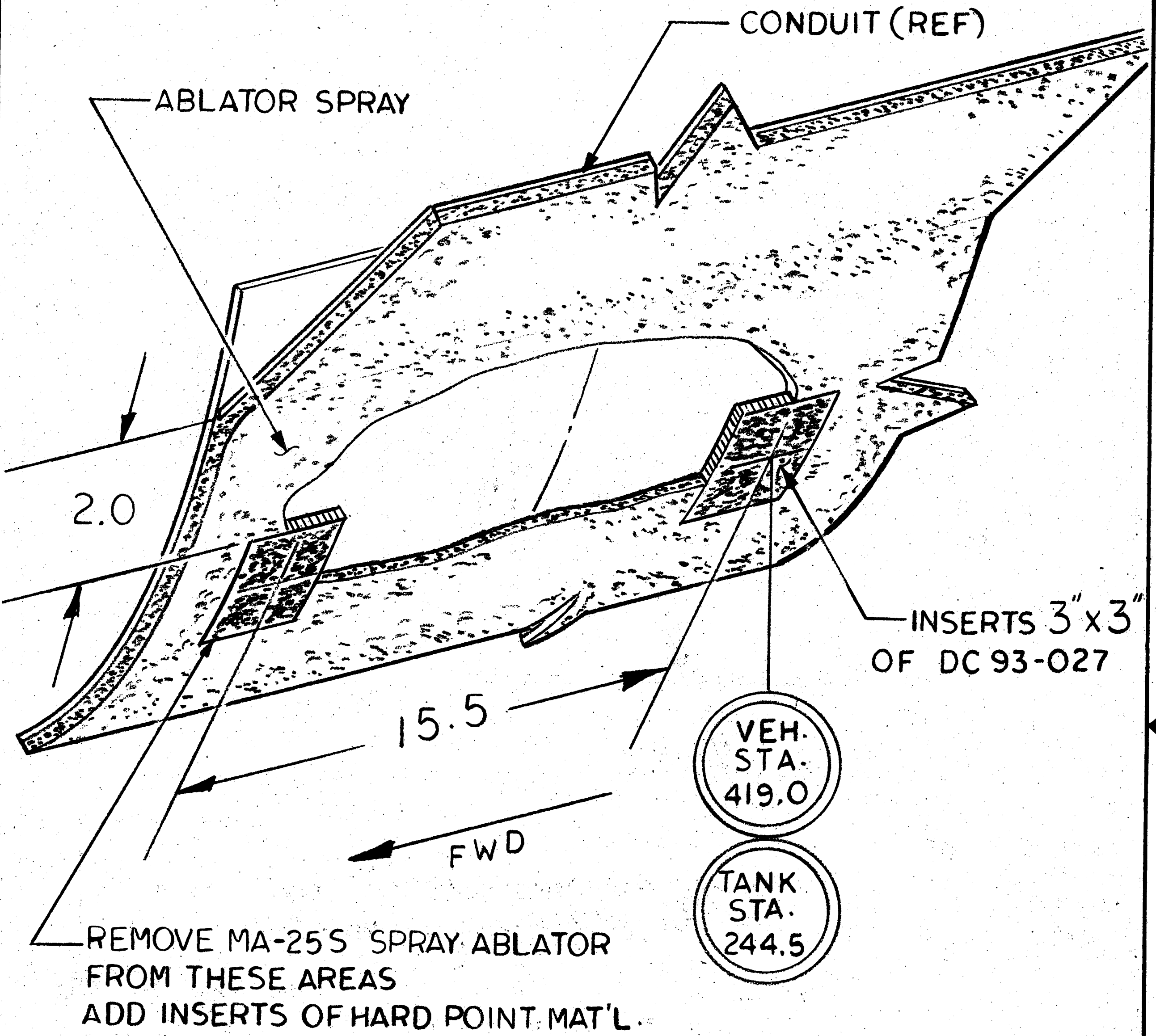

TANK INB'D. SWAY BRACE

FIGURE IV-28

REV	SIZE A	CODE IDENT NO. 38597	
	SCALE		SHEET

FORM MM-1112A (12-65)

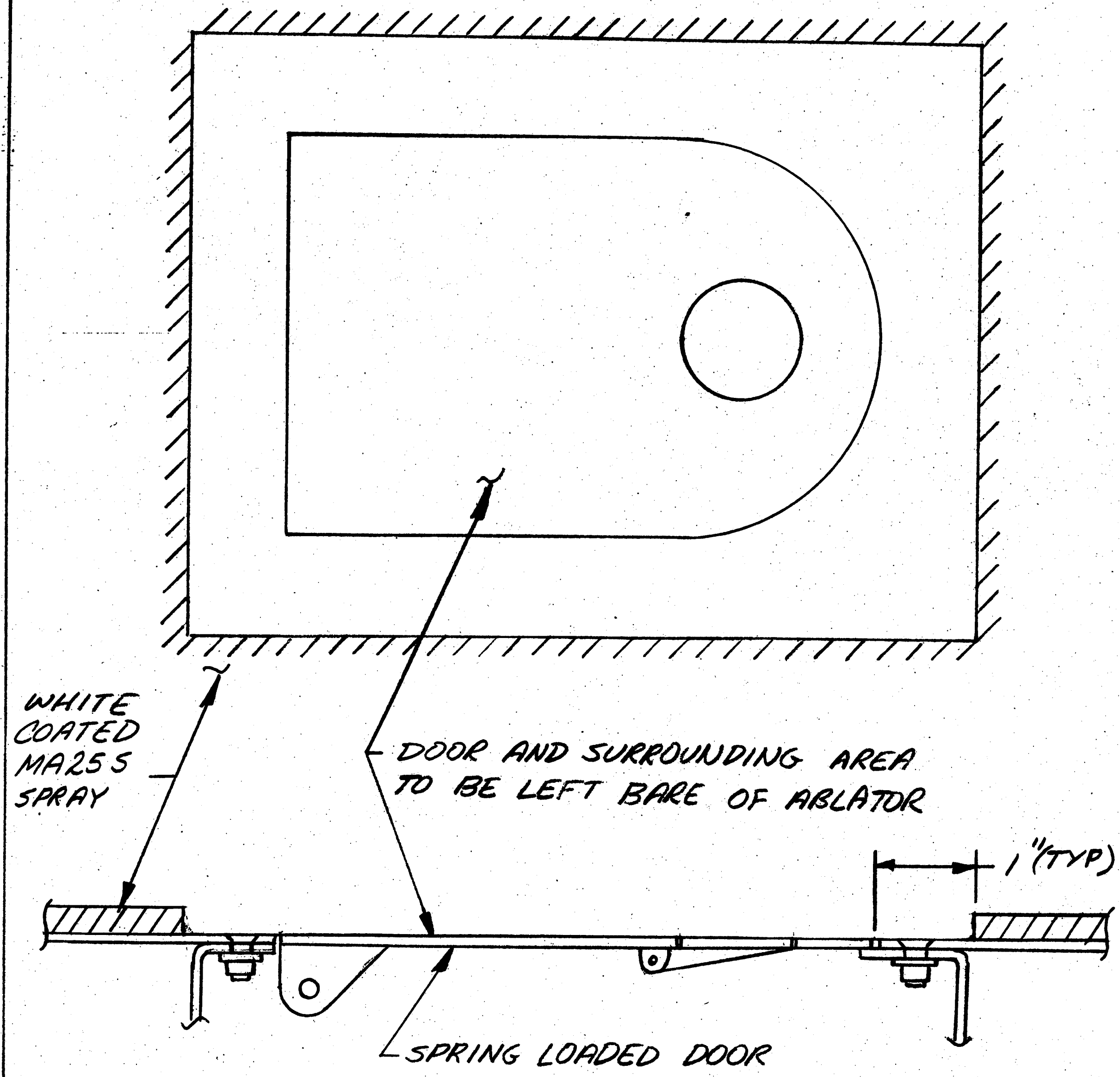

LOX FILL & DROP TANK VENT

INTERFACE ABLATOR DESIGN

FIGURE IV-29

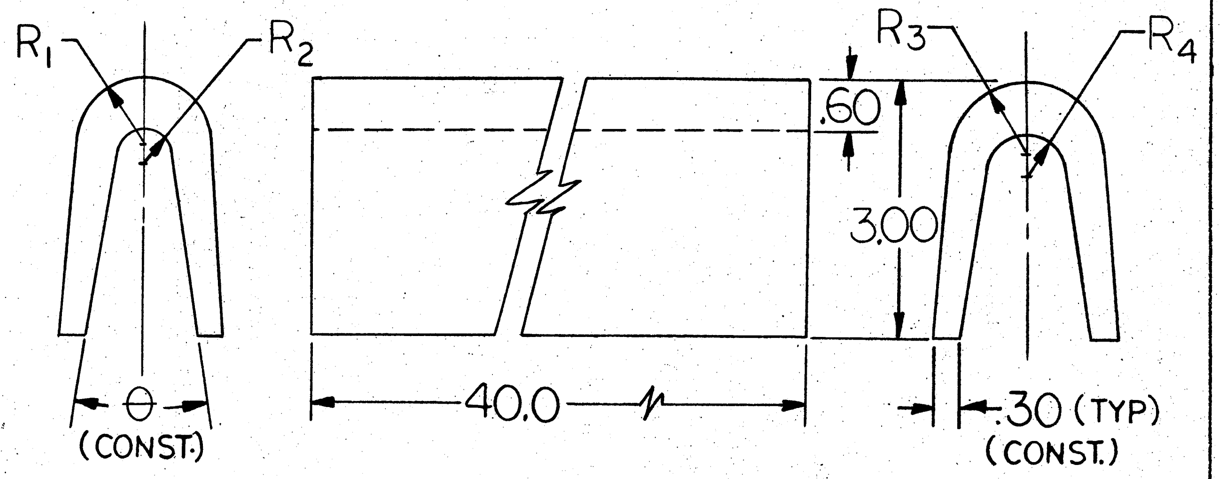

QTY 2 OF EACH DETAIL REQUIRED PER SHIP INSTAL.

DETAIL NO.	R_1	R_2	R_3	R_4	θ	MATL.
-001	.70	.25	.77	.33	10.0°	ESA3560-IIA
-003	.77	.33	.84	.41	13.3°	ESA3560-II A
-005	.84	.41	.90	.50	16.3°	ESA3560-II A

LEADING EDGE SEGMENT HORIZONTAL STABILIZER

FIGURE IV-30

SK82798

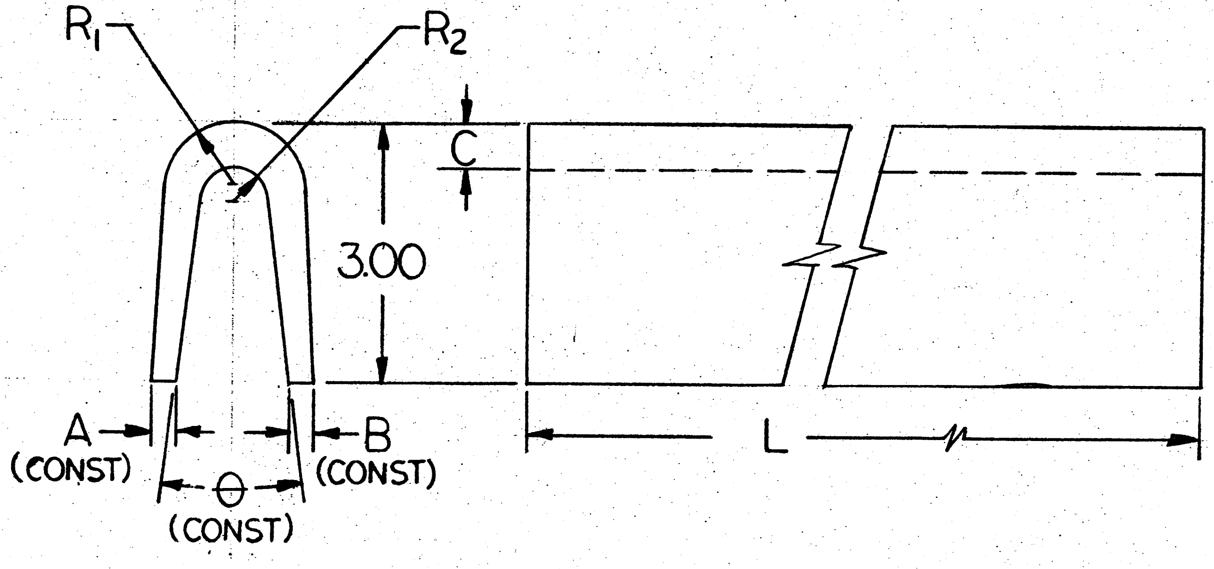

USAGE	DETAIL NO.	R_1	R_2	A	B	C	L	θ	MATL.	QUANTITY PER SHIP
WING	-001	.80	.38	.30	.34	.50	40.0	14.6°	ESA3560-IIA	6
STAB.	-003	.78	.50	.25	.25	.44	45.0	11.0°	ESA3560-IIA	3

LEADING EDGE SEGMENTS
WING & VERTICAL STABILIZER

FIGURE IV-31

SK82799

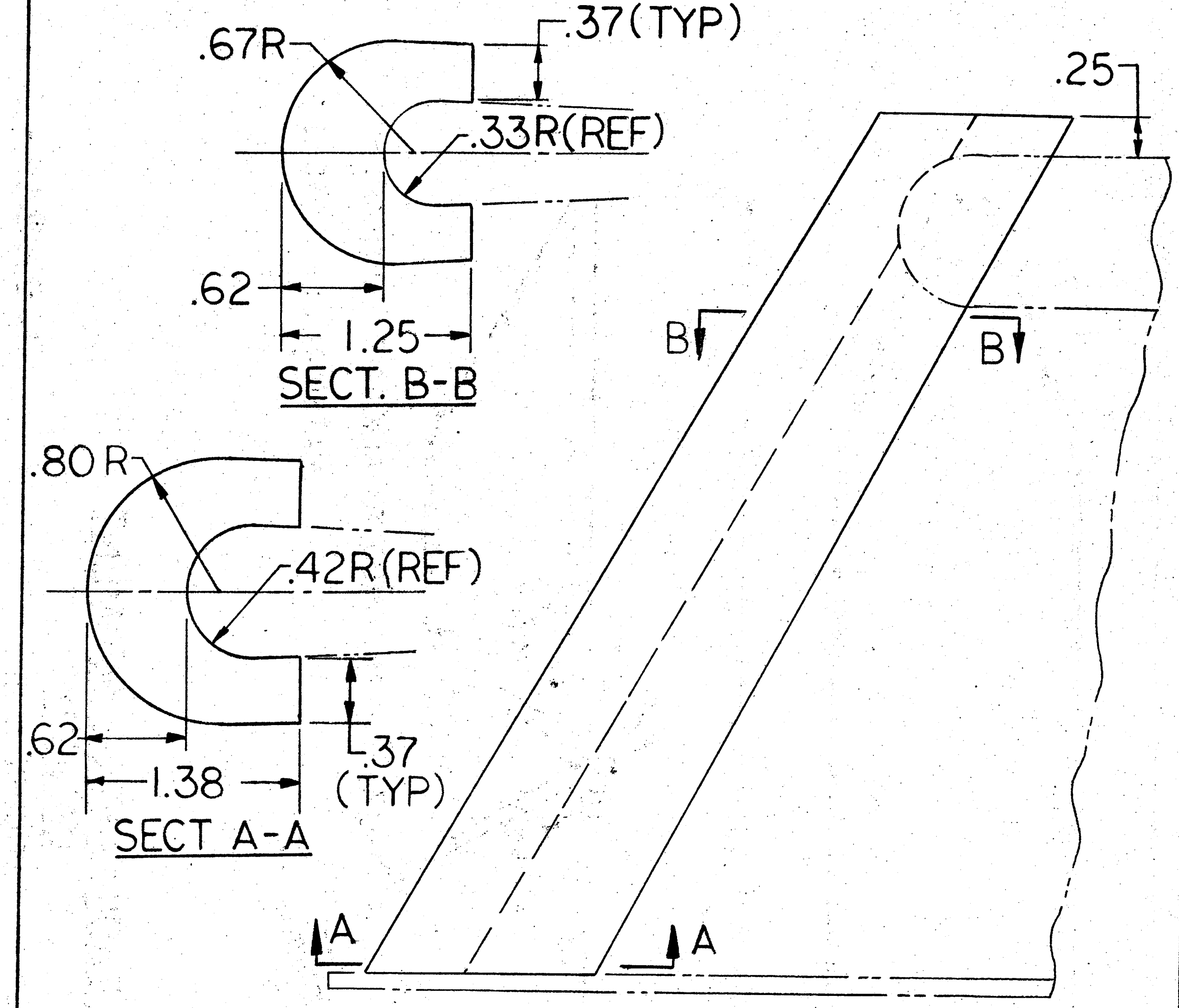

DETAIL -001

NOTE: PART INTERIOR TO BE MATCHED TO ANTENNA CONFIGURATION.

MATERIAL: ESA 3560-IIA

QTY. 2 REQUIRED PER SHIP INSTAL.

LEADING EDGE SEGMENT
VANE ANTENNA

FIGURE IV-32

SK82800

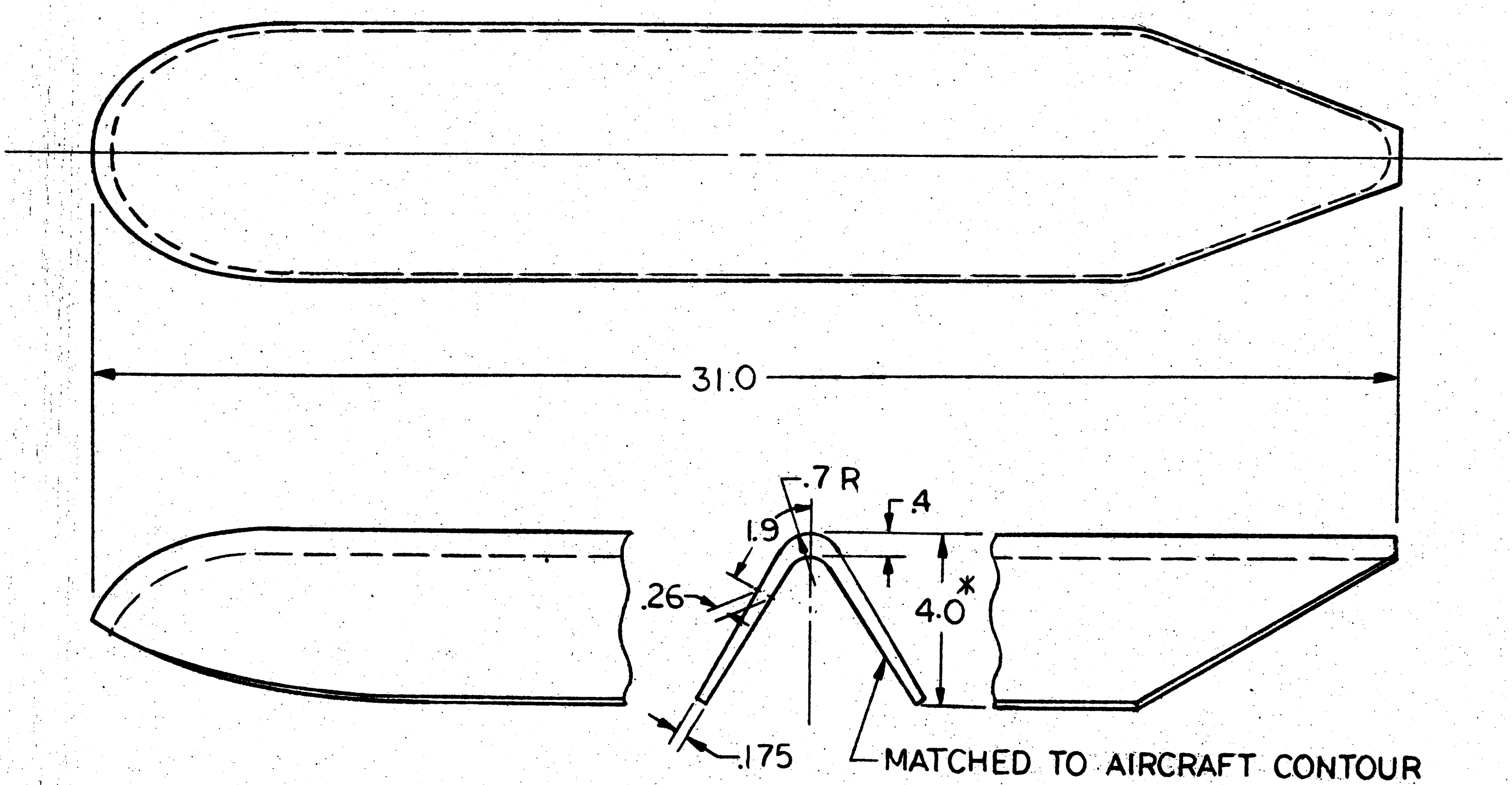

*- TRIM AS REQUIRED AT INSTALLATION

MATERIAL: ESA3560-IIA

Rev 1

LEADING EDGE SEGMENT
CANOPY
FIGURE IV-33

SK82801-001

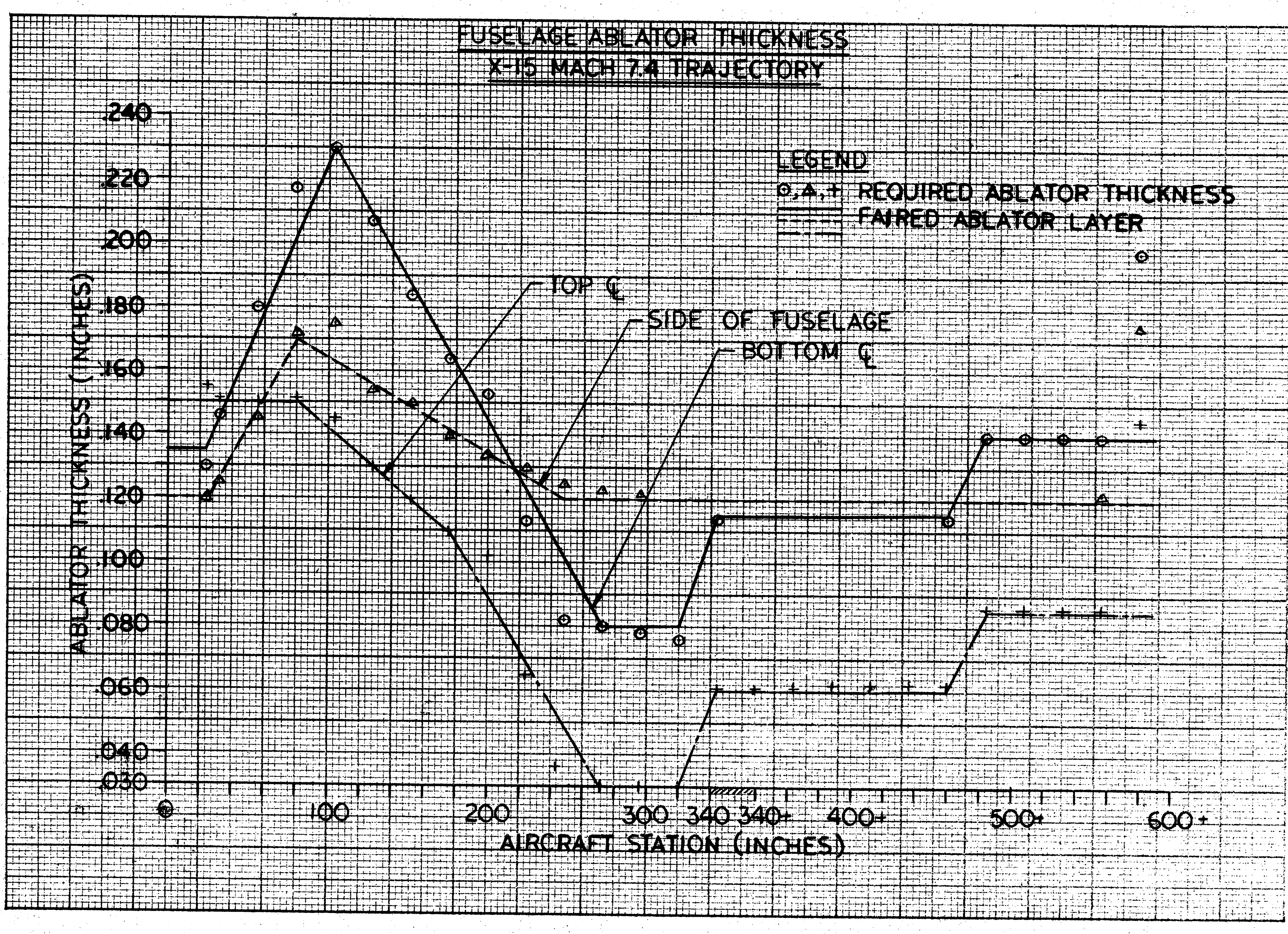
FUSELAGE ABLATOR THICKNESS
X-15 MACH 7.4 TRAJECTORY
LEGEND
⊙,▲,+ REQUIRED ABLATOR THICKNESS
FAIRED ABLATOR LAYER
TOP ℄
SIDE OF FUSELAGE
BOTTOM ℄
ABLATOR THICKNESS (INCHES)
.240
.220
.200
.180
.160
.140
.120
.100
.080
.060
.040
.030
AIRCRAFT STATION (INCHES)
100
200
300
340
340+
400+
500+
600+

FIGURE IV-34

FOLDOUT FRAME 1

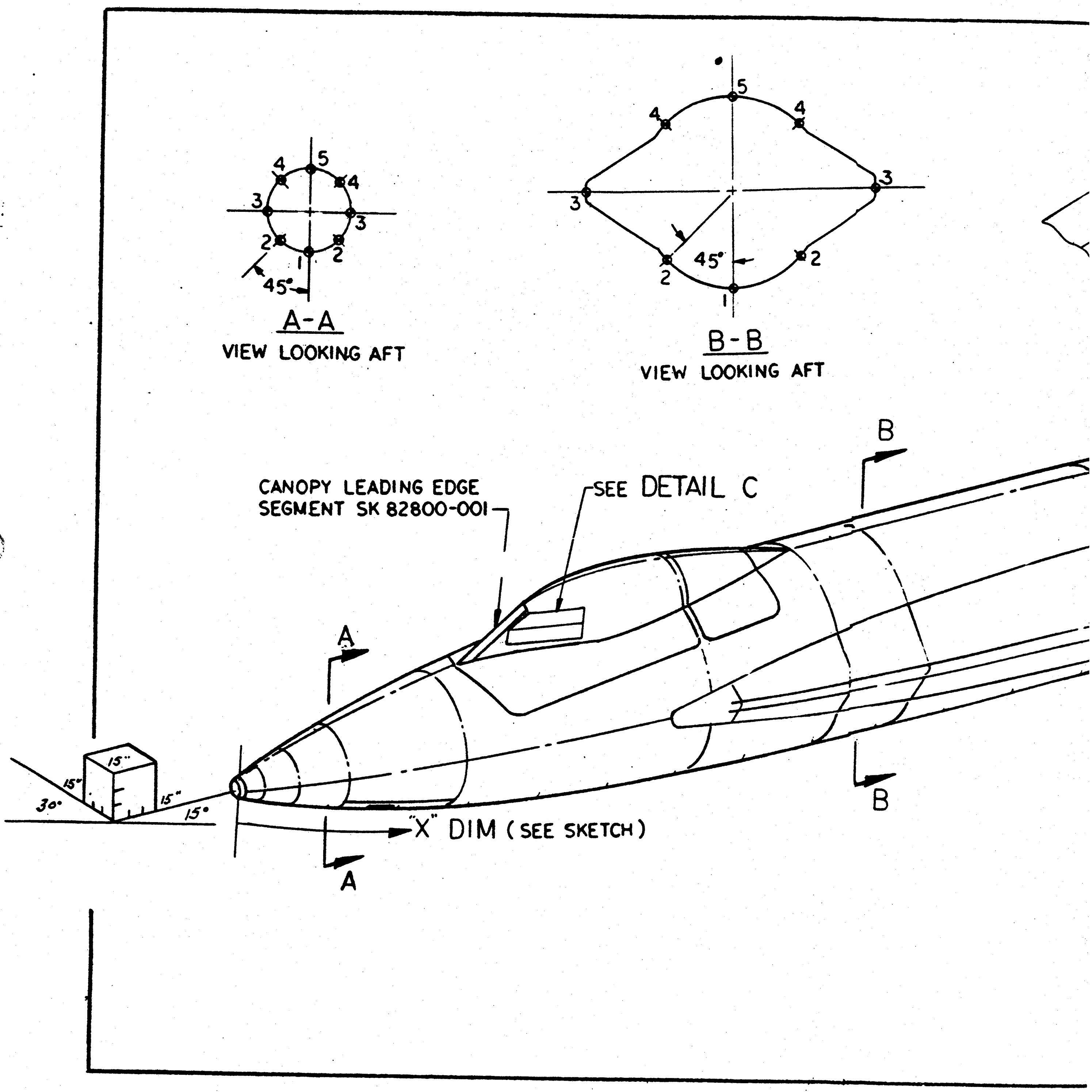

FOLDOUT FRAME 2

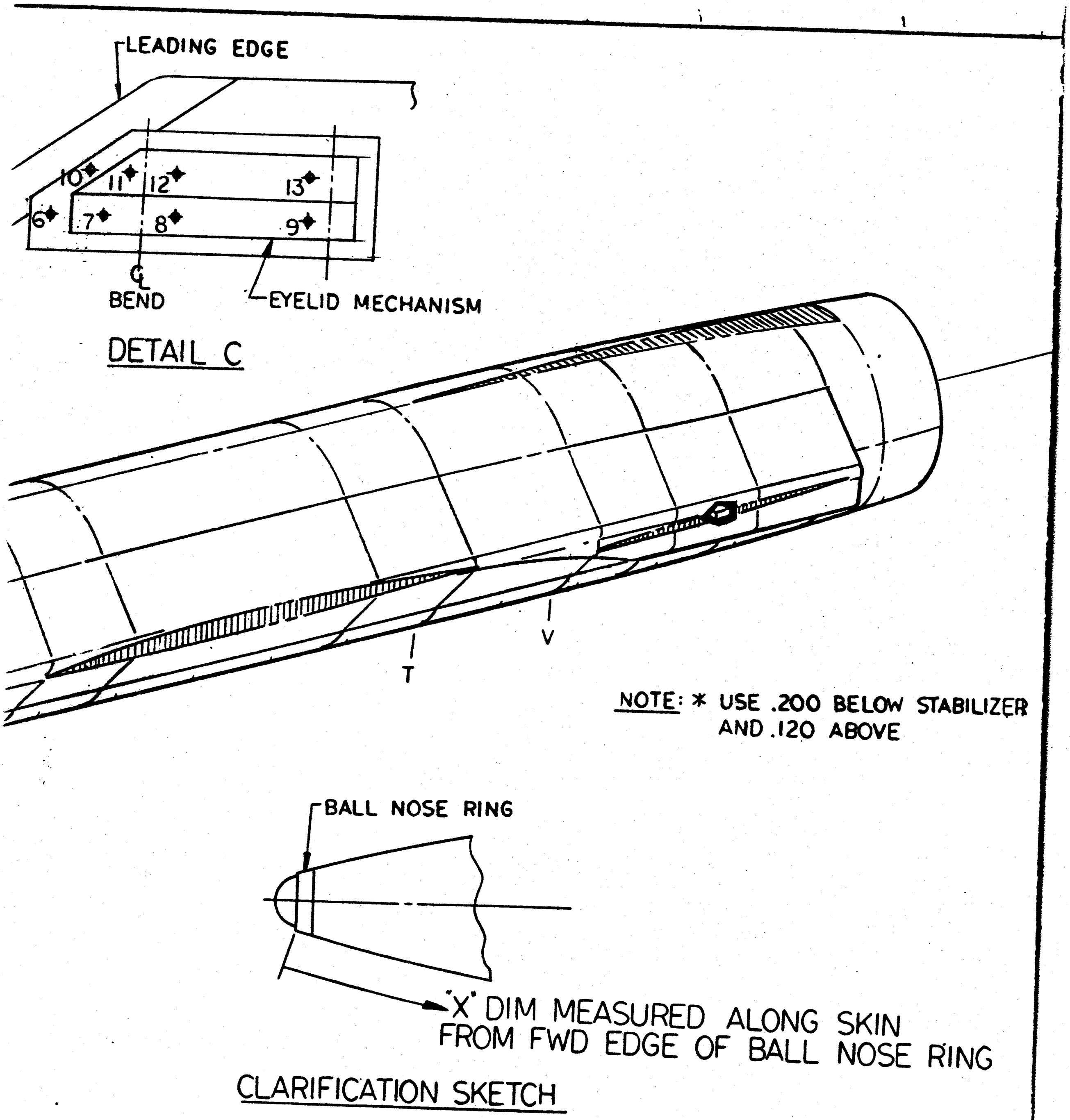

DETAIL C

NOTE: * USE .200 BELOW STABILIZER AND .120 ABOVE

CLARIFICATION SKETCH

FUSELAGE ABLATOR REQUIREMENTS

FIGURE IV-35

DATA PLANE	X DIM.	THICKNESS AT DATA POINT				
		1	2	3	4	5
A	1 FT.	.160	.125	.120	.135	.150
B	3 FT.	.195	.140	.120	.135	.150
C	5 FT.	.175	.160	.145	.145	.150
D	7 FT.	.205	.190	.170	.160	.150
E	9 FT.	.230	.195	.165	.155	.140
F	11 FT.	.210	.180	.155	.145	.130
G	13 FT.	.185	.165	.150	.135	.120
H	15 FT.	.165	.155	.140	.125	.110
I	17 FT.	.145	.140	.135	.110	.090
J	19 FT.	.125	.125	.130	.100	.070
K	21 FT.	.100	.110	.125	.090	.050
L	23 FT.	.080	.100	.120	.075	.030
M	25 FT.	.080	.100	.120	.075	.030
N	27 FT.	.080	.100	.120	.075	.030
O	29 FT.	.115	.115	.120	.090	.060
P	31 FT.	.115	.115	.120	.090	.060
Q	33 FT.	.115	.115	.120	.090	.060
R	35 FT.	.115	.115	.120	.090	.060
S	37 FT.	.115	.115	.120	.090	.060
T	39 FT.	.115	.115	.120	.090	.065
U	41 FT.	.115	.115	.120	.090	.065
V	43 FT.	.220	.210	*	.095	.075
W	45 FT.	.220	.210	*	.100	.085
X	47 FT.	.220	.210	*	.100	.085
Y	49 FT.	.220	.210	*	.100	.085
Z	51 FT.	.220	.210	*	.100	.085

DATA POINT	LOCATION	THKNS
6	FWD RAMP	.200
7	DOOR RAMP	.200
8	DOOR FLAT	.125
9	DOOR FLAT	.125
10	FWD RAMP	.200
11	DOOR RAMP	.200
12	DOOR, FLAT	.125
13	DOOR FLAT	.125

FOLDOUT FRAME 1

FOLDOUT FRAME 2

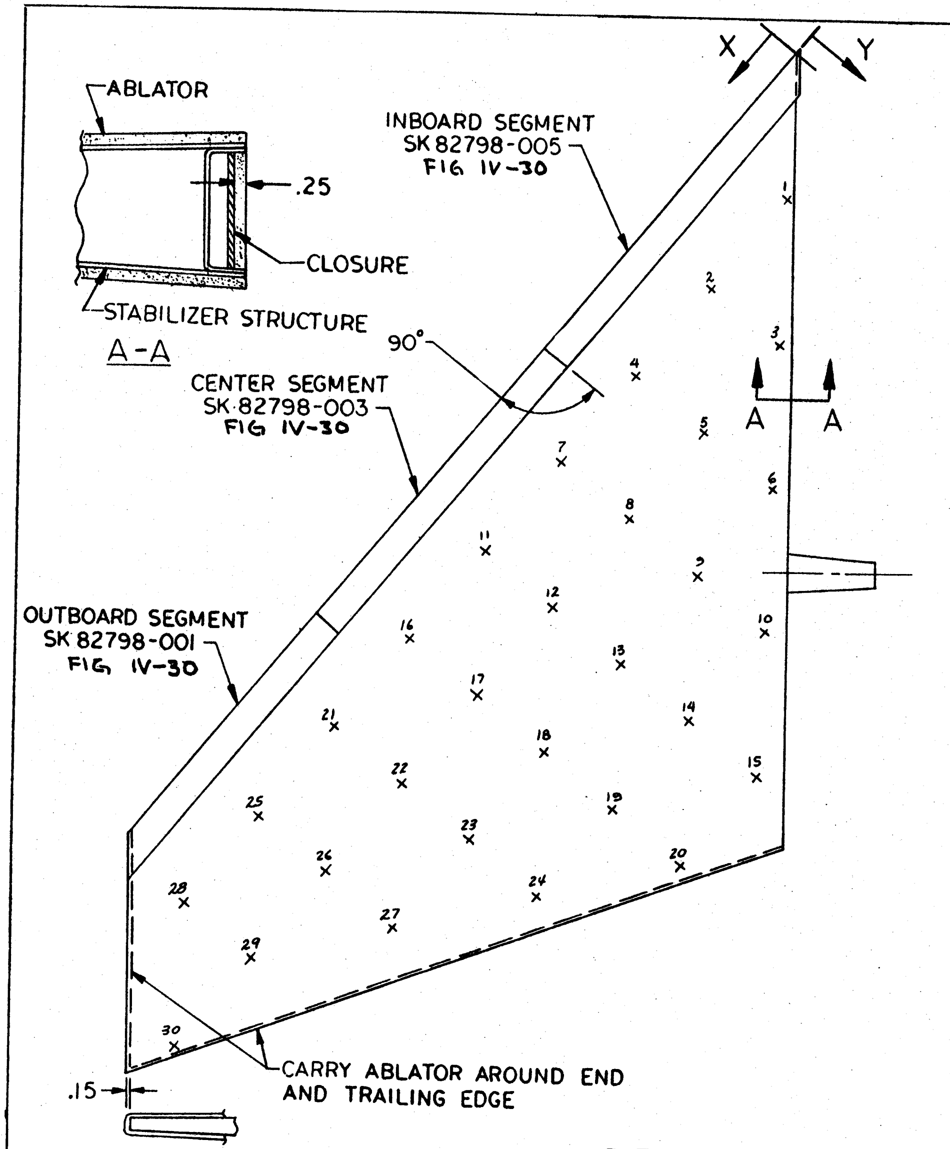

HORIZONTAL STABILIZER

FIGURE IV-36

ABLATOR THICKNESS*

LOC.	"X" DIM	"Y" DIM	THKN'S
1	12	9	.210
2	24	9	.210
3	24	18	.175
4	36	9	.205
5	36	18	.170
6	36	27	.150
7	48	9	.200
8	48	18	.165
9	48	27	.145
10	48	36	.130
11	60	9	.195
12	60	18	.160
13	60	27	.140
14	60	36	.130
15	60	45	.125
16	72	9	.190
17	72	18	.150
18	72	27	.135
19	72	36	.125
20	72	45	.120
21	84	9	.180
22	84	18	.145
23	84	27	.130
24	84	36	.120
25	96	9	.170
26	96	18	.140
27	96	27	.125
28	108	9	.160
29	108	18	.130
30	120	18	.120

*-UPPER & LOWER SURFACES HAVE EQUAL ABLATOR APPLICATIONS.

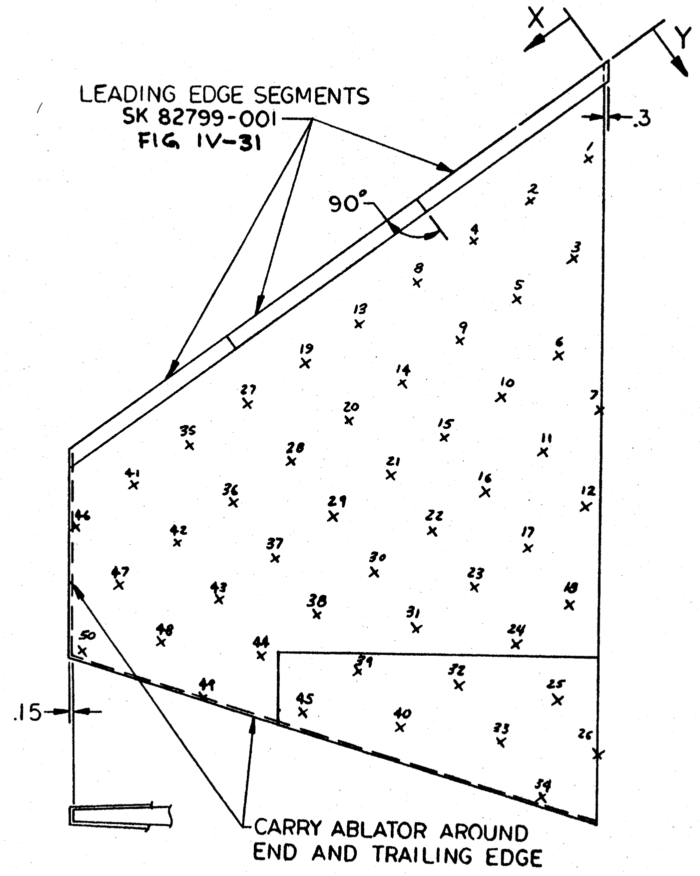

ABLATOR THICKNESS REQUIREMENTS

LOC.	X DIM	Y DIM	UPPER SURFACE	LOWER SURFACE
1	12	12	.140	.200
2	24	12	.140	.210
3	24	24	.100	.180
4	36	12	.135	.220
5	36	24	.080	.205
6	36	36	.040	.180
7	36	48	.030	.155
8	48	12	.120	.220
9	48	24	.060	.205
10	48	36	.040	.175
11	48	48	.030	.160
12	48	60	.030	.145
13	60	12	.120	.220
14	60	24	.060	.205
15	60	36	.030	.185
16	60	48	.030	.160
17	60	60	.030	.145
18	60	72	.030	.135
19	72	12	.120	.225
20	72	24	.060	.210
21	72	36	.030	.185
22	72	48	.030	.160
23	72	60	.030	.175
24	72	72	.030	.200
25	72	84	.030	.195
26	72	96	.030	.190
27	84	12	.120	.230
28	84	24	.060	.210
29	84	36	.030	.190
30	84	48	.030	.170
31	84	60	.030	.200
32	84	72	.040	.205
33	84	84	.030	.195
34	84	96	.030	.190
35	96	12	.135	.265
36	96	24	.085	.230
37	96	36	.030	.190
38	96	48	.030	.175
39	96	60	.040	.205
40	96	72	.040	.200
41	108	12	.140	.265
42	108	24	.085	.230
43	108	36	.050	.215
44	108	48	.040	.205
45	108	60	.040	.200
46	120	12	.140	.265
47	120	24	.085	.230
48	120	36	.070	.220
49	120	48	.065	.215
50	132	30	.065	.215

WING & FLAP

FIGURE IV-37

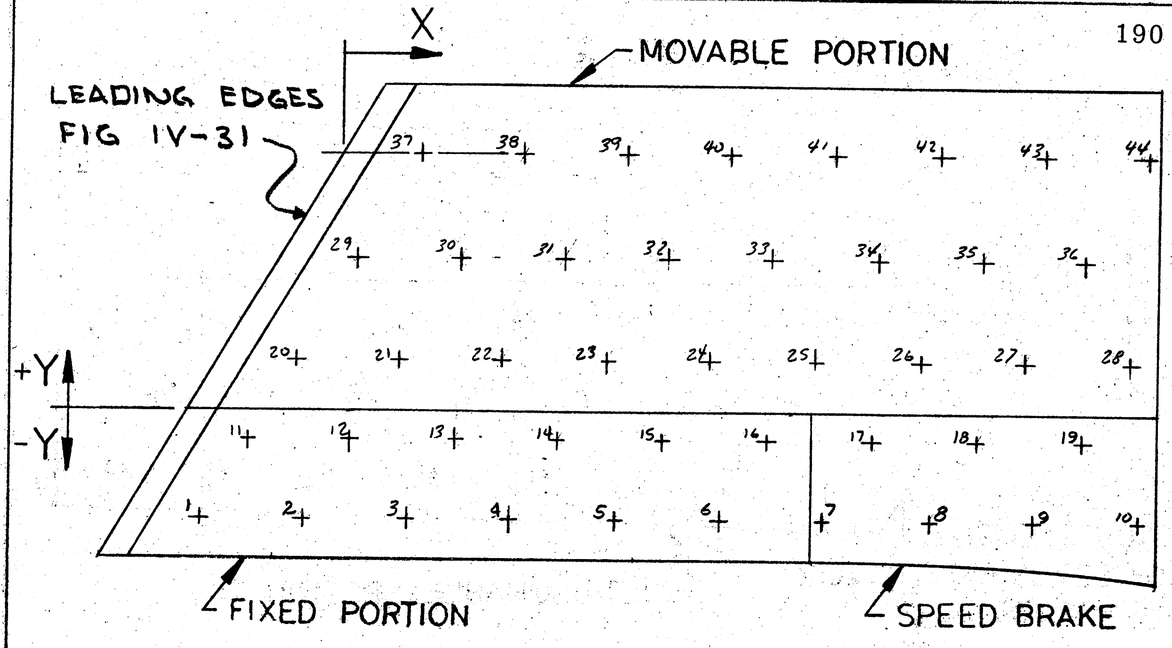

NOTE: ABLATOR THICKNESS IS THE SAME FOR BOTH SIDES OF VERT. STAB.

LOC.	X DIM.	Y DIM.	THICKN'S
1	9	-12	.260
2	21	-12	.255
3	33	-12	.205
4	45	-12	.200
5	57	-12	.195
6	69	-12	.190
7	81	-12	.200
8	93	-12	.200
9	105	-12	.200
10	117	-12	.200
11	9	-3	.260
12	21	-3	.255
13	33	-3	.205
14	45	-3	.200
15	57	-3	.195
16	69	-3	.190
17	81	-3	.200
18	93	-3	.200
19	105	-3	.200
20	9	6	.260
21	21	6	.255
22	33	6	.250
23	45	6	.260
24	57	6	.260
25	69	6	.260
26	81	6	.255
27	93	6	.250
28	105	6	.250
29	9	18	.260
30	21	18	.255
31	33	18	.250
32	45	18	.260
33	57	18	.260
34	69	18	.260
35	81	18	.255
36	93	18	.250
37	9	30	.260
38	21	30	.255
39	33	30	.250
40	45	30	.260
41	57	30	.260
42	69	30	.255
43	81	30	.250
44	93	30	.250

UPPER VERTICAL STABILIZER

FIGURE IV-38

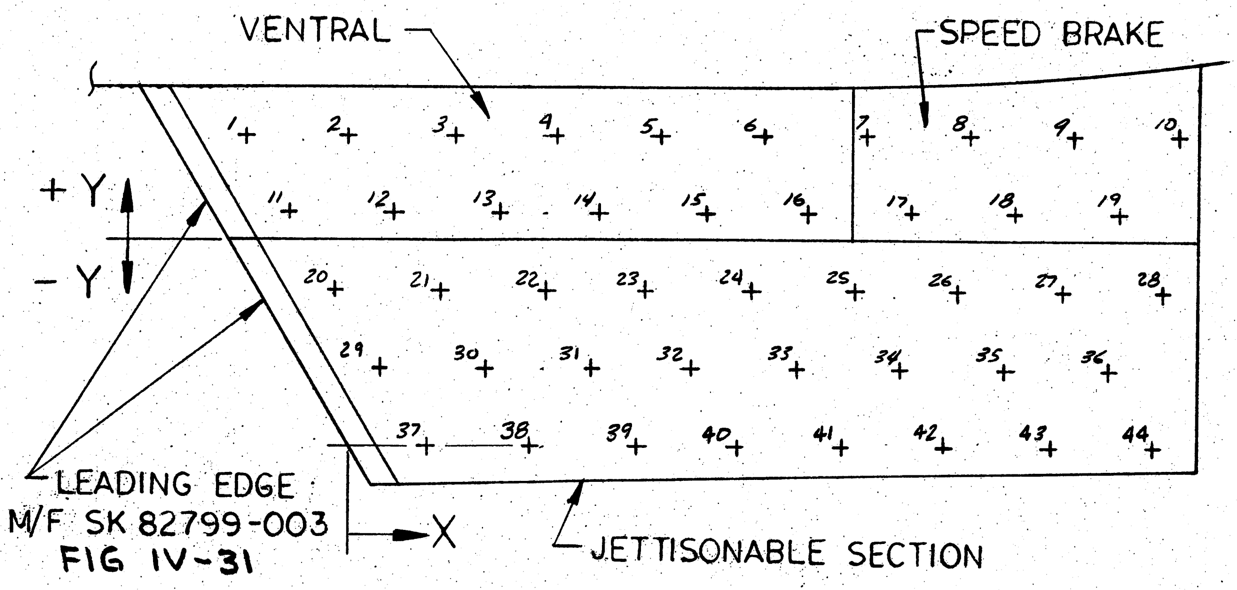

NOTE: ABLATOR THICKNESS IS THE SAME FOR BOTH SIDES OF VERT. STAB.

LOC.	X DIM	Y DIM	THICKN'S
1	9	12	.260
2	21	12	.255
3	33	12	.205
4	45	12	.200
5	57	12	.195
6	69	12	.190
7	81	12	.200
8	93	12	.200
9	105	12	.200
10	117	12	.200
11	9	3	.260
12	21	3	.255
13	33	3	.205
14	45	3	.200
15	57	3	.195
16	69	3	.190
17	81	3	.200
18	93	3	.200
19	105	3	.200
20	9	-6	.260
21	21	-6	.255
22	33	-6	.250
23	45	-6	.260
24	57	-6	.260
25	69	-6	.260
26	81	-6	.255
27	93	-6	.250
28	105	-6	.250
29	9	-15	.260
30	21	-15	.255
31	33	-15	.250
32	45	-15	.260
33	57	-15	.260
34	69	-15	.260
35	81	-15	.255
36	93	-15	.250
37	9	-24	.260
38	21	-24	.255
39	33	-24	.250
40	45	-24	.260
41	57	-24	.260
42	69	-24	.255
43	81	-24	.250
44	93	-24	.250

LOWER VERTICAL STABILIZER

FIGURE IV-39

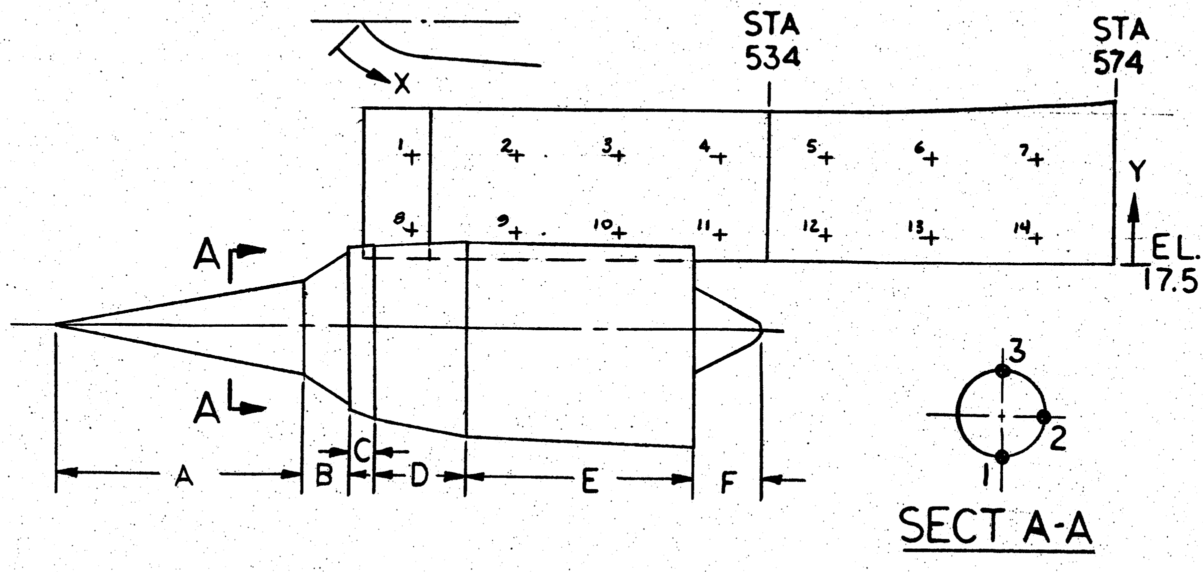

LOC.	X DIM.	Y DIM.	TH'KN'S
1	6	12	*
2	18	12	.280
3	30	12	.270
4	42	12	.260
5	54	12	**
6	66	12	**
7	78	12	**
8	6	3	*
9	18	3	.280
10	30	3	.270
11	42	3	.260
12	54	3	**
13	66	3	**
14	78	3	**

LOC.	TH'KN'S
A-1	.31
A-2	.25
A-3	.25
B-1	.42
B-2	.39
B-3	.39
C-1	.31
C-2	.29
C-3	.29
D-1	.22
D-2	.18
D-3	.18
E-1	.15
E-2	.09
E-3	.09
F-1	.00
F-2	.00
F-3	.00

<u>NOTE:</u> * ABLATOR THICKNESS WILL BE FAIRED TO MATCH THE MOLDED LEADING EDGE DETAIL IN THIS AREA.

** ABLATOR IN THIS AREA WILL ADDED WHEN VENTRAL FIN DESIGN IS FINALIZED

MODIFIED VENTRAL & DUMMY RAM-JET

FIGURE IV-40

V. PRECAUTIONS & SPECIAL HANDLING REQUIREMENTS

The ablator materials which comprise the thermal protection system for the X-15A-2 are, by nature, soft and friable and easily subject to damage. The white wear layer applied over the exterior of the ablator surface provides some degree of protection from inadvertent abrasion, but special precautions must be exercised by personnel servicing or working on the ablator protected aircraft. This section defines the minimum precautionary measures necessary to protect the ablator installation. No list of requirements, however, can supplant the value of properly indoctrinating the persons to be associated with the aircraft, to acquaint them with the ablator materials and their characteristics. Observation of normal good work habits and responsible performance by cognizant personnel are prerequisite to ablation system protection.

A. Maintenance and Servicing

All possible functional checks and system maintenance should be performed prior to the application of ablator on the aircraft. Work on the ablator coated aircraft should be limited to the normal preflight maintenance and servicing functions, and whatever malfunction and/or repair operations that become necessary.

Within this philosophy, ablator treatment around service panels varies depending upon the anticipated access requirements. Access has been provided for the peripheral attachment bolts of panels which can normally be expected to be removed subsequent to ablator application.

These panels have strips of a densified ablator around their periphery. These strips provide a measure of protection against handling damage to the ablator edges, and also contain local cutouts to provide access to the fastener heads.

These cutouts are normally plugged with ablator buttons, and the button must be removed and discarded to expose the fastener.

Attachments for aircraft panels other than above are completely covered by the sprayed ablator layer. Should removal of any of these panels become necessary, Martin personnel should be contacted to locally remove the ablator layer from around the panel periphery. Repair of the ablator layer subsequent to panel replacement is required.

Some method for protected storage of all removed panels is required for both the hanger and servicing areas, and some measure of caution is required during removal, storage and replacement of the panels to maintain the integrity of the ablative layer.

System servicing also requires extra care to minimize spillage and avoid damaging the ablator with the system supply connectors or lines. Compatibility of the ablator material with the various aircraft systems fluids is shown in Table III-1, but exceptional amounts of spillage or local saturation of the ablator should be reviewed by Martin personnel to determine the condition of the ablator layer.

B. Aircraft Handling

During normal aircraft operations, a number of occasions arise when persons must work while standing on an ablator-coated surface. Naturally, these situations should be kept to a minimum, but shoe protection in the form of plastic covers shall be used whenever the ablator surface must be walked upon. No tool boxes should be set on ablator surfaces, and care must be exercised not to drop tools on, or strike the ablator coating with them.

During positioning or relocating the aircraft (e.g., mating with the B-52) personnel should avoid pushing directly upon the coated edges of the aircraft control surfaces. Hand pressure should be exerted on the flat portions of the vehicle, and not at the edges where the ablator layer is unsupported.

C. Damage Reporting

If damage, of any degree, occurs to any portion of the ablator surface, it must be reported so that repair can be made. All questionable areas should be referred to the cognizant Martin representative for corrective action as required.

VI. THERMAL PROTECTION SYSTEM WEIGHT

While the ablator application is necessary to protect the aircraft from the excessive aerodynamic heating of the high speed missions, it also -- by its presence -- contributes to the overall flight vehicle weight. A knowledge of the ablator weight and its distribution over the vehicle is required to determine the effects on aircraft balance and center of gravity. From these, estimates can be made of the handling and performance characteristics of an ablator protected aircraft, and control surface trim requirements can be predicted.

The calculated ablator weight breakdown and distribution for the Mach 7.4 thermal protection system are defined in the remainder of this report section.

A. Overall System Weight

Because of the inverse relationship between vehicle gross weight and mission performance, a target weight of 400 lb was established for the ablator system at program initiation. The actual system weight and its breakdown to major vehicle areas is shown in Table VI-1. It should be noted that the need for a wear layer over the ablator system was not anticipated at the time the target weight was established. There are, by necessity, many conservatisms in the ablator system as reported herein. These can best be eliminated by the correlation of instrumented flight test results, and will result in a lower gross weight for the finalized thermal protection system.

B. Specific Weight Distribution

To calculate the ablator system weight, the aircraft was sub-divided into the same major sections used originally to establish the ablator layer thicknesses (i. e. , fuselage, wing, horizontal stabilizer, upper and lower vertical stabilizer). The same grid networks, used over these areas to define the ablator, were utilized to determine the weight distribution over the various surfaces. For all areas, except the fuselage, the existing grid networks had to be expanded to avoid accumulating errors in the system weight. The resultant grid networks used in the weight calculations for the wing, horizontal stabilizer, upper and lower vertical stabilizers are shown in Figures VI-1 thru VI-4, respectively. The ablator layer weight calculations for the various areas of the aircraft associated with these networks are shown in Tables VI-2 thru VI-5.

The ablator weight breakdown for the modified ventral fin and the dummy ramjet installation are shown in Figure VI-5 and Table VI-7.

TABLE VI-1
ABLATION SYSTEM WEIGHT SUMMARY
MACH 7. 4 DESIGN

Existing Ship 2 Configuration

Vehicle Area	Leading Edges $\rho = 54$ lb/ft^3	Sprayed Layer $\rho = 28$ lb/ft^3
Fuselage	1. 5	225.3
Wings	14. 0	62.6
Horizontal Stabilizers	11. 5	32. 5
Upper Vertical Stabilizer	2. 6	44.3
Lower Vertical Stabilizer	2. 2	36.8
Total Ablator Weight	31. 8 lb	401.5 lb
Wear Layer Weight	22 lb	
Total System Weight	455.3 lb	

Ship 2 with Modified Ventral & Ramjet

Fuselage	1. 5	225.3
Wings	14. 0	62.6
Horizontal Stabilizers	11. 5	32. 5
Upper Vertical Stabilizer	2. 6	44.3
Modified Ventral	*	*
Dummy Ramjet	--	10. 1
Total Ablator Weight	*	*
Wear Layer	21 lb	
Total System Weight	*	

* TO BE ADDED WHEN VENTRAL FIN DESIGN IS FINALIZED

TABLE VI-2

FUSELAGE ABLATOR WEIGHT

X-15 MACH 7.4 TRAJECTORY

Geometry			Ablator Data			Geometry			Ablator Data		
Sec	EL	Area in^2	Thick in	Vol. in^3	Weight lb	Sec	EL	Area in^2	Thick in	Vol. in^3	Weight lb
A	1	57.48	.160	9.20	.15	F	1	243.62	.210	51.16	.82
	2	114.96	.125	14.37	.23		2	487.25	.180	87.70	1.42
	3	114.96	.120	13.79	.22		3	487.25	.155	75.52	1.22
	4	114.96	.135	15.52	.25		4	487.25	.145	70.65	1.14
	5	57.48	.150	8.62	.14		5	372.00	.130	48.36	.78
B	1	110.74	.195	21.59	.35	G	1	258.24	.185	47.77	.77
	2	221.47	.140	31.00	.50		2	516.48	.165	85.21	1.38
	3	221.47	.120	26.57	.43		3	516.48	.150	77.47	1.25
	4	221.47	.135	29.89	.48		4	516.48	.135	69.72	1.13
	5	110.74	.150	16.61	.26		5	340.80	.120	40.89	.66
C	1	155.50	.220	34.21	.55	H	1	263.88	.165	43.54	.70
	2	310.99	.160	49.75	.80		2	527.76	.155	81.80	1.32
	3	310.99	.145	45.09	.73		3	624.00	.140	87.36	1.41
	4	310.99	.145	45.09	.73		4	527.76	.125	65.97	1.06
	5	155.50	.150	23.32	.37		5	307.20	.110	33.79	.54
D	1	192.74	.205	39.51	.64	I	1	264.84	.145	38.40	.62
	2	385.49	.190	73.24	1.18		2	544.08	.140	76.17	1.23
	3	385.49	.170	65.53	1.06		3	700.80	.135	94.60	1.53
	4	385.49	.160	61.67	.99		4	544.08	.110	59.84	.97
	5	192.74	.150	28.91	.46		5	264.84	.090	23.83	.38
E	1	222.43	.230	51.15	.82	J	1	264.84	.125	33.10	.53
	2	444.86	.195	86.74	1.40		2	548.88	.125	68.61	1.11
	3	444.86	.165	73.41	1.18		3	792.00	.130	102.96	1.66
	4	444.86	.155	68.95	1.11		4	548.88	.100	54.88	.88
	5	355.20	.140	49.72	.80		5	264.84	.070	18.53	.30

TABLE VI-2 (cont.)

Sec	Geometry EL	Area	Thick	Ablator Data Vol	Weight	Sec	Geometry EL	Area	Thick	Ablator Data Vol	Weight
K	1	264.84	.100	26.48	.42	P	1	264.84	.115	21.18	.34
	2	563.28	.110	61.96	1.00		2	553.68	.115	63.67	1.03
	3	840.00	.125	105.00	1.70		3	816.00	.120	97.92	1.58
	4	563.28	.090	50.69	.82		4	553.68	.090	49.83	.80
	5	264.84	.050	13.24	.21		5	264.84	.060	15.89	.25
L	1	264.84	.080	21.18	.34	Q	1	264.84	.115	21.18	.34
	2	560.88	.100	56.08	.90		2	553.68	.115	63.67	1.03
	3	897.60	.120	107.71	1.74		3	816.00	.120	97.92	1.58
	4	560.88	.075	42.06	.68		4	553.68	.090	49.83	.80
	5	264.84	.030	7.94	.12		5	264.84	.060	15.89	.25
M	1	264.84	.080	21.18	.34	R	1	264.84	.115	21.18	.34
	2	558.48	.100	55.84	.90		2	553.68	.115	63.67	1.03
	3	936.00	.120	112.32	1.82		3	816.00	.120	97.92	1.58
	4	558.48	.075	41.88	.67		4	553.68	.090	49.83	.80
	5	264.84	.030	7.94	.12		5	264.84	.060	15.89	.25
N	1	264.84	.080	21.18	.34	S	1	264.84	.115	21.18	.34
	2	553.68	.100	55.36	.89		2	553.68	.115	63.67	1.03
	3	816.00	.120	97.92	1.58		3	816.00	.120	97.92	1.58
	4	553.68	.075	41.52	.67		4	553.68	.090	49.83	.80
	5	264.84	.030	7.94	.12		5	264.84	.060	15.89	.25
O	1	264.84	.115	21.18	.34	T	1	264.84	.115	21.18	.34
	2	553.68	.115	63.67	1.03		2	553.68	.115	63.67	1.03
	3	816.00	.120	97.92	1.58		3	816.00	.120	97.92	1.58
	4	553.68	.090	49.83	.80		4	553.68	.090	49.83	.80
	5	264.84	.060	15.89	.25		5	264.84	.065	17.21	.27

Table VI-2 (cont.)

	Geometry		Ablator Data				Geometry		Ablator Data		
Sec	EL	Area	Thick	Vol	Weight	Sec	EL	Area	Thick	Vol	Weight
U	1	232.80	.115	26.77	.43	X	1	76.80	.220	16.89	.27
	2	587.28	.115	67.53	1.09		2	691.20	.210	145.15	2.35
	3	1152.00	.120	138.24	2.23		3	912.00	.160	145.92	2.36
	4	556.08	.090	50.04	.81		4	549.60	.100	54.96	.89
	5	232.80	.065	15.13	.24		5	76.80	.085	6.52	.10
V	1	180.84	.220	39.78	.64	Y	1		.220		
	2	606.48	.210	127.36	2.06		2	629.81	.210	132.26	2.14
	3	907.20	.160	145.15	2.35		3	1056.00	.160	168.96	2.74
	4	558.48	.095	53.05	.86		4	543.41	.100	54.34	.88
	5	180.84	.075	13.56	.22		5		.085		
W	1	130.44	.220	28.69	.46	Z	1	196.32	.220	42.19	.70
	2	620.88	.210	130.38	2.11		2	392.64	.210	82.45	1.33
	3	926.40	.160	148.22	2.40		3	392.64	.160	62.82	1.02
	4	553.68	.100	55.36	.89		4	392.64	.100	39.26	.63
	5	130.44	.085	11.08	.18		5	196.32	.085	16.68	.27

Weight per Fuselage Side 112.67 lb

Total Weight both Sides of Fuselage 225.34 lb

TABLE VI-3

WING ABLATOR WEIGHT

X-15 MACH 7.4 TRAJECTORY

EL No.	EL Area	Lower Surface Thick	Lower Surface Vol	Lower Surface Weight	Upper Surface Thick	Upper Surface Vol	Upper Surface Weight
	in^2	in	in^3	lb	in	in^3	lb
1	103	.200	20.60	.33	.140	14.42	.23
2	144	.210	30.24	.49	.140	20.16	.32
3	131	.180	23.58	.38	.100	13.10	.21
4	144	.220	31.68	.51	.135	19.44	.31
5	144	.205	29.52	.47	.080	11.52	.18
6	144	.180	25.92	.42	.040	5.76	.09
7	84	.155	13.02	.21	.030	2.52	.04
8	144	.220	31.68	.51	.120	17.28	.28
9	144	.205	29.52	.47	.060	8.64	.14
10	144	.175	25.20	.40	.040	5.76	.09
11	144	.160	23.04	.37	.030	4.32	.07
12	113	.145	16.39	.26	.030	3.40	.05
13	144	.220	31.68	.51	.120	17.28	.28
14	144	.205	29.52	.47	.060	8.64	.14
15	144	.185	26.64	.43	.030	4.32	.07
16	144	.160	23.04	.37	.030	4.32	.07
17	144	.145	20.88	.33	.030	4.32	.07
18	144	.135	19.44	.31	.030	4.32	.07
19	144	.225	32.40	.52	.120	17.28	.28
20	144	.210	30.24	.49	.060	8.64	.14
21	144	.185	26.64	.43	.030	4.32	.07
22	144	.160	23.04	.37	.030	4.32	.07
23	144	.175	25.20	.40	.030	4.32	.07
24	144	.200	28.80	.46	.030	4.32	.07
25	144	.195	28.08	.45	.030	4.32	.07
26	84	.190	15.96	.25	.030	2.52	.04
27	144	.230	33.12	.53	.120	17.28	.28
28	144	.210	30.24	.49	.060	8.64	.14
29	144	.190	27.36	.44	.030	4.32	.07
30	144	.170	24.48	.39	.030	4.32	.07
31	144	.200	28.80	.46	.030	4.32	.07
32	144	.205	29.52	.47	.040	5.76	.09
33	144	.195	28.08	.45	.030	4.32	.07
34	84	.190	15.96	.25	.030	2.52	.04
35	144	.265	38.16	.61	.135	19.44	.31
36	144	.230	33.12	.53	.085	12.24	.19
37	144	.190	27.36	.44	.030	4.32	.07
38	144	.175	25.20	.40	.030	4.32	.07
39	144	.205	29.52	.47	.040	5.76	.09
40	135.8	.200	27.16	.44	.040	5.43	.08

TABLE VI-3 (cont.)

EL No.	EL Area	Lower Surface Thick	Lower Surface Vol	Lower Surface Weight	Upper Surface Thick	Upper Surface Vol	Upper Surface Weight
41	144	.265	38.16	.61	.140	20.16	.32
42	144	.230	33.12	.53	.085	12.24	.19
43	144	.215	30.96	.50	.050	7.20	.11
44	144	.205	29.52	.47	.040	5.76	.09
45	117.6	.200	23.52	.38	.040	4.70	.07
46	100.5	.265	26.63	.43	.140	14.07	.22
47	144	.230	33.12	.53	.085	12.24	.19
48	144	.220	31.68	.51	.070	10.08	.16
49	85	.215	18.28	.29	.065	5.53	.09
50	80	.215	17.20	.27	.065	5.20	.08
51	192	.230	4.42	.07	.100	1.92	.03
52	9.9	.220	2.18	.03	.070	.69	.01
53	4.4	.200	.88	.01	.050	.22	.00
54	21.5	.200	4.30	.07	.040	.86	.01
55	51	.195	9.94	.16	.030	1.53	.02
56	10.2	.190	1.94	.03	.030	.31	.00
57	45	.215	9.68	.15	.030	1.35	.02
58	18.7	.140	2.62	.04	.030	.56	.01
59	3.9	.150	.59	.01	.030	.12	.00
60	43.2	.180	7.78	.12	.070	3.02	.04
61	13.8	.190	2.62	.04	.120	1.66	.02
62	43.8	.300	13.14	.21	.250	1.10	.01
63	36	.300	10.80	.17	.250	.90	.01
64	36	.305	10.08	.17	.250	.90	.01
65	36	.305	10.98	.17	.245	8.82	.14
66	36	.305	10.98	.17	.245	8.82	.14
67	36	.305	10.98	.17	.245	8.82	.14
68	36	.305	10.98	.17	.245	8.82	.14
69	36	.318	11.45	.18	.250	.90	.01
70	42.6	.318	13.55	.22	.250	1.07	.01

Total Weight per Wing 31.32 lb

Total Weight Both Wings 62.64 lb

TABLE VI-4
HORIZONTAL STABILIZER ABLATOR WEIGHT

EL No.	EL Area	Thick	Grid Data Vol.	Weight	EL No.	EL Area	Thick	Grid Data Vol.	Weight
	in^2	in	in^3	lb		in^2	in	in^3	lb
1	60.8	.210	12.76	.20	25	108	.170	18.36	.29
2	108	.210	22.68	.36	26	108	.140	15.12	.24
3	72.8	.175	12.74	.20	27	108	.125	13.50	.21
4	108	.205	22.14	.35	28	104.6	.160	16.73	.27
5	108	.170	18.36	.29	29	108	.130	14.04	.22
6	77.4	.150	11.61	.18	30	38.0	.120	4.56	.07
7	108	.200	21.60	.35	31	52.8	.120	6.33	.10
8	108	.165	17.82	.28	32	25.2	.140	3.52	.05
9	108	.145	15.66	.25	33	16.9	.120	2.02	.03
10	82	.130	10.66	.17	34	5.3	.120	.63	.01
11	108	.195	21.06	.34	35	6.2	.125	.77	.01
12	108	.160	17.28	.28	36	7.9	.125	.98	.01
13	108	.140	15.12	.24	37	3.3	.140	.46	.00
14	108	.130	14.04	.22	38	2.5	.160	.40	.00
15	90.2	.125	11.27	.18	39	.9	.195	.17	.00
16	108	.188	20.30	.32	40	19.9	.269	5.35	.08
17	108	.150	16.20	.26	41	18	.269	4.84	.07
18	108	.135	14.58	.23	42	18	.267	4.80	.07
19	108	.125	13.50	.21	43	18	.265	4.77	.07
20	73.6	.120	8.83	.14	44	18	.263	4.73	.07
21	108	.180	19.44	.31	45	18	.261	4.69	.07
22	108	.145	15.66	.25	46	18	.258	4.64	.07
23	108	.130	14.04	.22	47	18	.255	4.59	.07
24	91.2	.120	10.94	.17	48	12	.251	3.01	.04

Total Weight per Surface	8.12 lb
Total Weight per Stabilizer	16.24 lb
Total Weight both Stabilizers	32.48 lb

TABLE VI-5

UPPER VERTICAL STABILIZER WEIGHT DATA

X-15 MACH 7.4 TRAJECTORY

EL No.	EL Area	Thick	Ablator Data Vol.	Weight	EL No.	EL Area	Thick	Ablator Data Vol.	Weight
	in^2	in	in^3	lb		in^2	in	in^3	lb
1	117	.260	30.42	.49	26	144	.255	36.72	.59
2	117	.255	29.83	.48	27	144	.250	36.00	.58
3	117	.205	23.98	.38	28	115.5	.250	28.87	.46
4	117	.200	23.40	.37	29	144	.260	37.44	.60
5	117	.194	22.81	.37	30	144	.255	36.72	.59
6	117	.190	22.23	.36	31	144	.250	36.00	.58
7	66	.200	13.20	.21	32	144	.260	37.44	.60
8	117	.200	23.40	.38	33	144	.260	37.44	.60
9	129	.200	25.80	.42	34	144	.260	37.44	.60
10	108.5	.200	21.70	.35	35	144	.255	36.72	.59
11	96	.260	24.96	.40	36	144	.250	36.00	.58
12	96	.255	24.48	.39	37	161	.260	41.86	.68
13	96	.205	19.68	.32	38	161	.255	41.05	.65
14	96	.200	19.20	.31	39	161	.250	40.25	.66
15	96	.195	18.72	.30	40	161	.260	41.86	.67
16	92.3	.190	17.53	.28	41	161	.260	41.86	.67
17	91	.200	18.20	.29	42	161	.255	41.05	.66
18	96	.200	19.20	.31	43	161	.250	40.25	.65
19	96	.200	19.20	.31	44	111	.250	27.75	.45
20	144	.260	37.44	.60	45	56	.190	10.64	.17
21	144	.255	36.72	.59	46	30	.200	6.00	.09
22	144	.250	36.00	.58	47	1.9	.250	.47	.00
23	144	.260	37.44	.60	48	33	.250	8.25	.13
24	144	.260	37.44	.60	49	3.7	.200	.74	.01
25	144	.260	37.44	.60					

Total Weight Per Side 22.15 lb

Total Weight of Upper Stabilizer 44.30 lb

TABLE VI-6
LOWER VERTICAL STABILIZER WEIGHT DATA
X-15 MACH 7.4 TRAJECTORY

EL No.	EL Area in^2	Ablator Data Thick in	Ablator Data Vol. in^3	Ablator Data Weight lb	EL No.	EL Area in^2	Ablator Data Thick in	Ablator Data Vol. in^3	Ablator Data Weight lb
1	117	.260	30.42	.49	26	126	.255	32.13	.52
2	117	.255	29.83	.48	27	126	.250	31.50	.51
3	117	.205	23.98	.38	28	126	.250	31.50	.51
4	117	.200	23.40	.37	29	105.5	.260	27.43	.44
5	117	.195	22.81	.37	30	108	.255	27.54	.44
6	117	.190	22.23	.36	31	108	.250	27.00	.43
7	66	.200	13.20	.21	32	108	.260	28.08	.45
8	117	.200	23.40	.38	33	108	.260	28.08	.45
9	129	.200	25.80	.42	34	108	.260	28.08	.45
10	108.5	.200	21.70	.35	35	108	.255	27.54	.44
11	96	.260	24.96	.40	36	108	.250	27.00	.43
12	96	.255	24.48	.39	37	104.5	.260	27.17	.43
13	96	.205	19.68	.32	38	101	.255	25.75	.41
14	96	.200	19.20	.31	39	98.5	.250	24.62	.39
15	96	.195	18.72	.30	40	96	.260	24.96	.40
16	92.3	.190	17.53	.28	41	93	.260	24.18	.39
17	91	.200	18.20	.29	42	90	.255	22.95	.37
18	96	.200	19.20	.31	43	87.5	.250	21.87	.35
19	96	.200	19.20	.31	44	85	.250	21.25	.34
20	126	.250	32.76	.53	45	56	.190	10.64	.17
21	126	.255	32.13	.52	46	30	.200	6.00	.09
22	126	.250	31.50	.51	47	1.9	.250	.47	.00
23	126	.260	32.76	.53	48	33	.250	8.25	.13
24	126	.260	32.76	.53	49	3.7	.200	.74	.01
25	126	.200	32.76	.53					

Total Weight per side 18.42 lb

Total Weight of Lower Stabilizer 36.84 lb

TABLE VI-7

ABLATOR WEIGHT BREAKDOWN
MODIFIED VENTRAL & DUMMY RAMJET

Ventral

EL No.	EL Area (in^2)	Thickness (in)	Volume (in^3)	Weight (lb)
1	186	*	*	*
2	186	.280	52.08	.84
3	186	.270	50.22	.81
4	192	.260	49.92	.80
5	740			
		Total Weight per Side		*
		Total Ventral Weight		*

Ramjet

EL No.	EL Area (in^2)	Thickness (in)	Volume (in^3)	Weight (lb)
A1	128.9	.31	39.9	.63
A2	386.8	.25	96.7	1.54
B1	54.3	.42	22.8	.36
B2	163.0	.39	63.5	1.01
C1	40.5	.31	12.5	.20
C2	121.6	.29	35.2	.56
D1	187.4	.22	41.6	.66
D2	568.3	.18	102.3	1.63
E1	522.1	.15	78.3	1.25
E2	1566.3	.09	140.9	2.25
F	--	0	--	--
		Total Ramjet Weight		10.09 lb

* TO BE ADDED WHEN VENTRAL FIN DESIGN IS FINALIZED

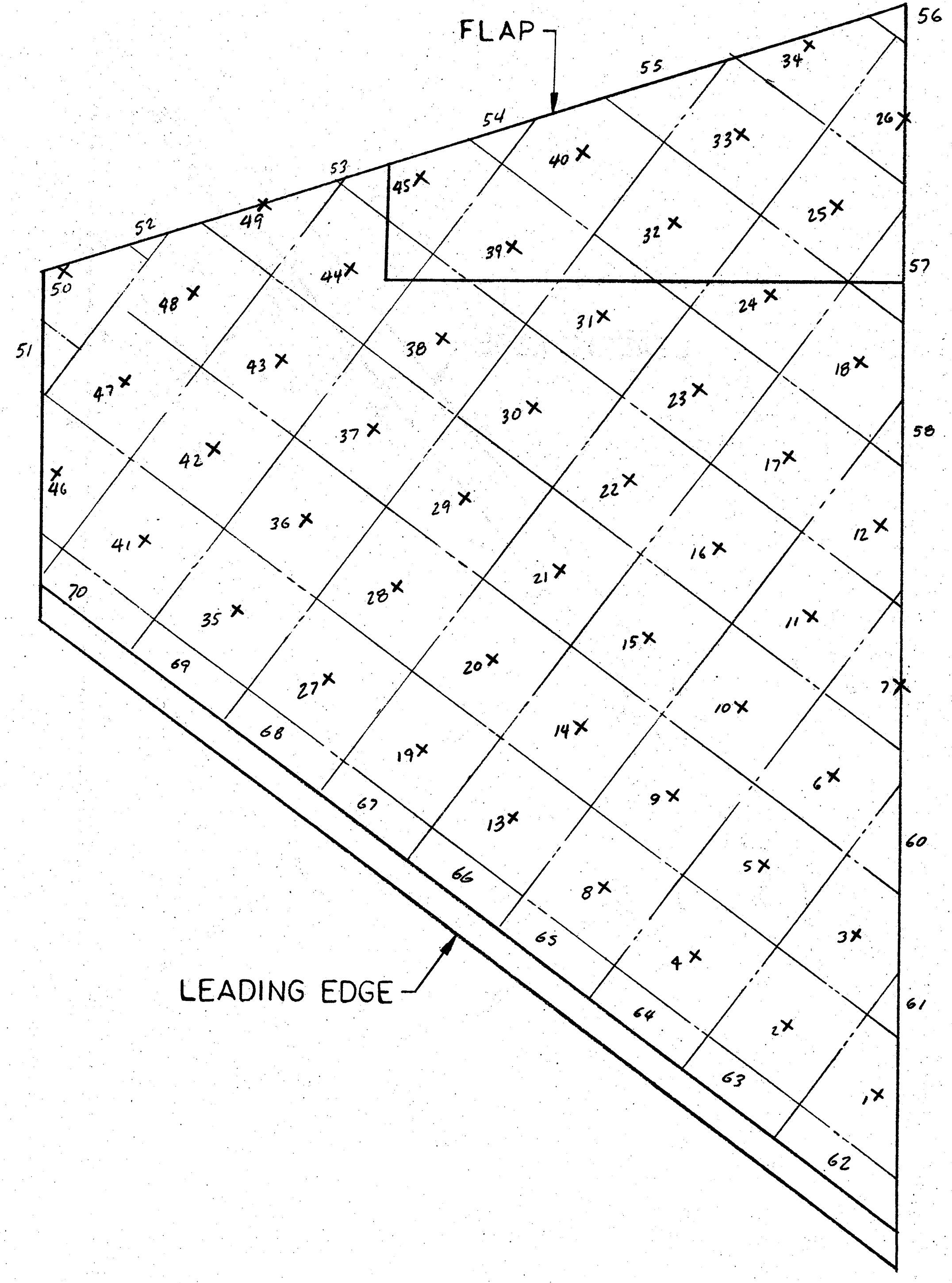

ABLATOR WEIGHT GRID

WING

FIGURE VI-1

Rev 1

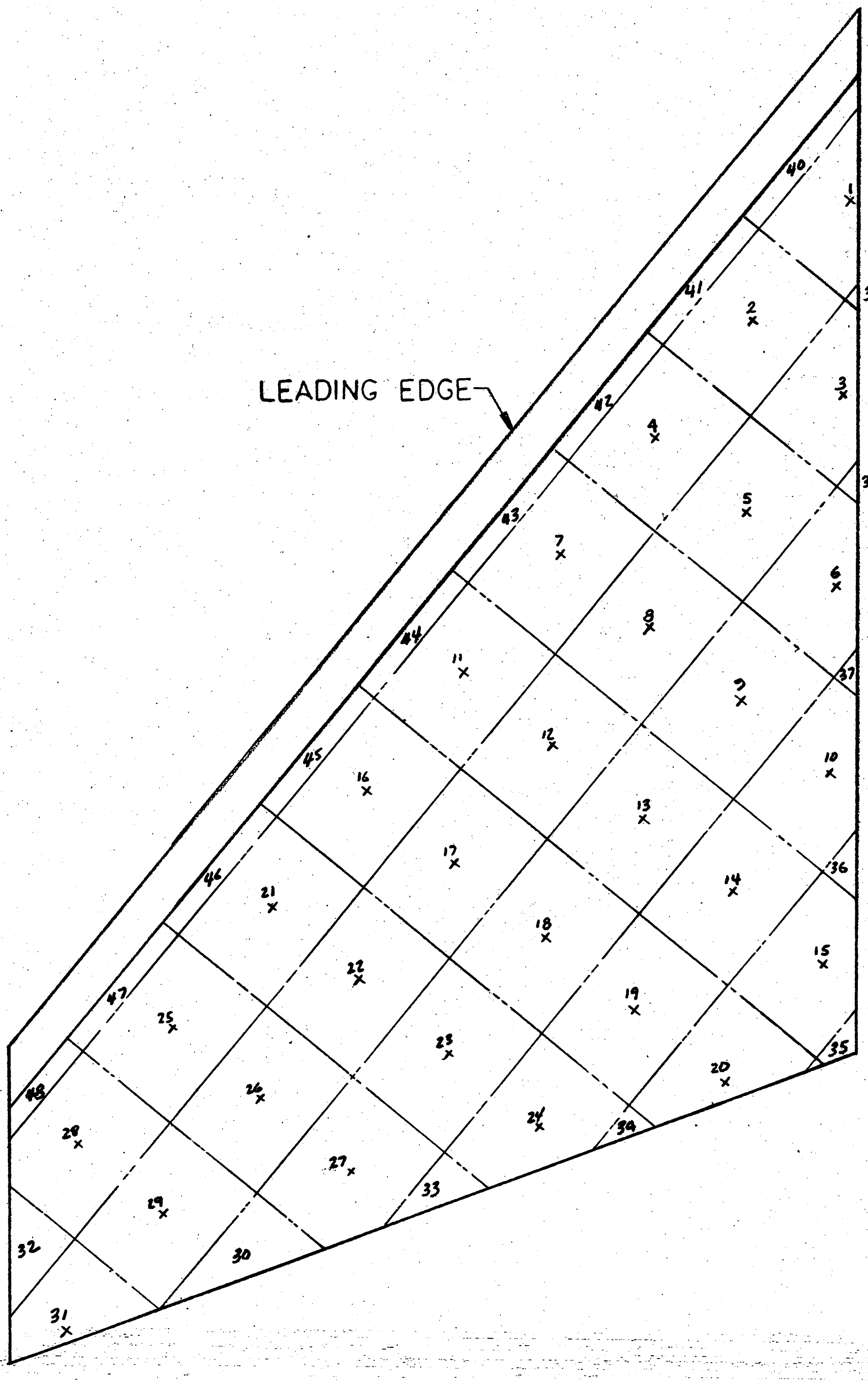

ABLATOR WEIGHT GRID
HORIZONTAL STABILIZER
FIGURE VI-2

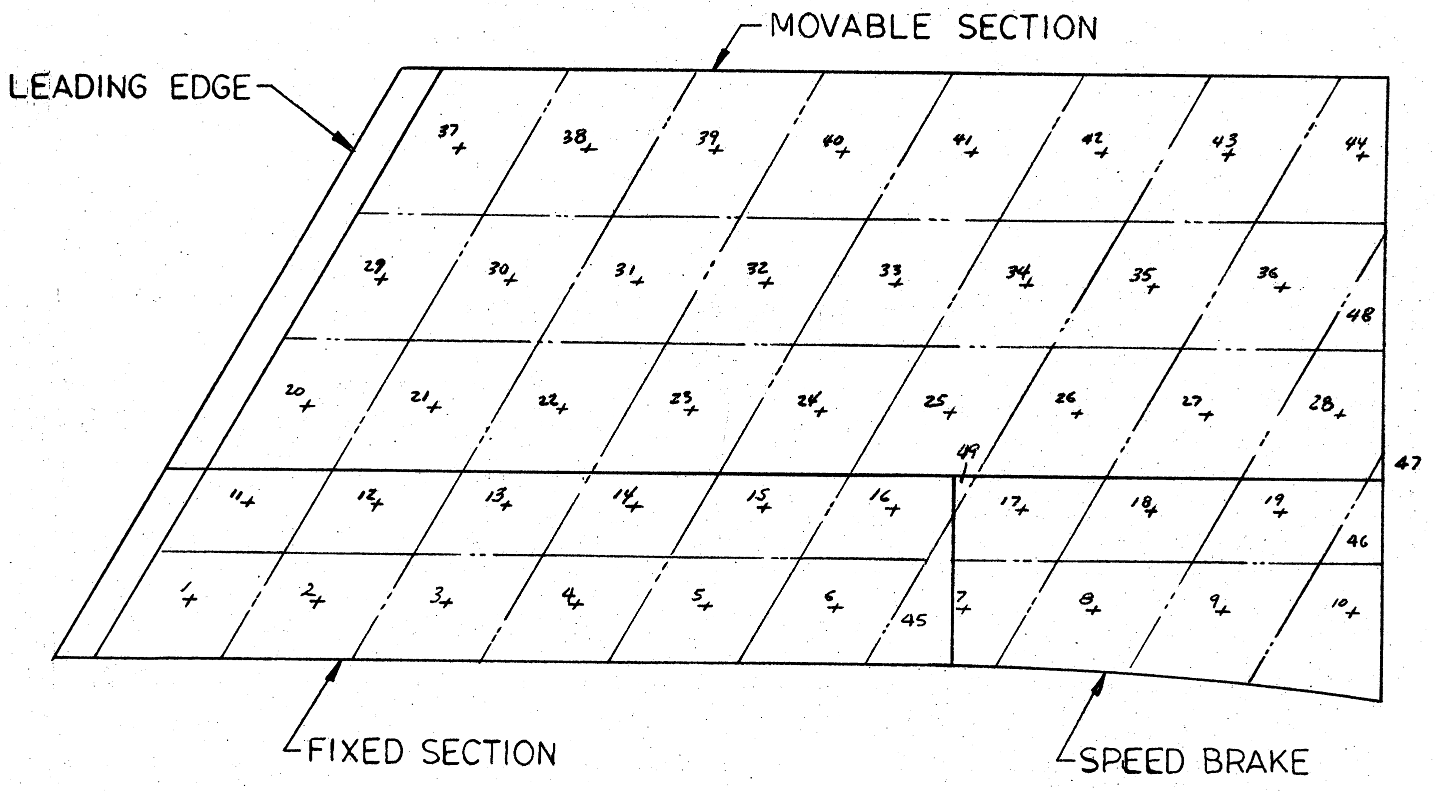

ABLATOR WEIGHT GRID
UPPER VERICAL STABILIZER
FIGURE VI-3

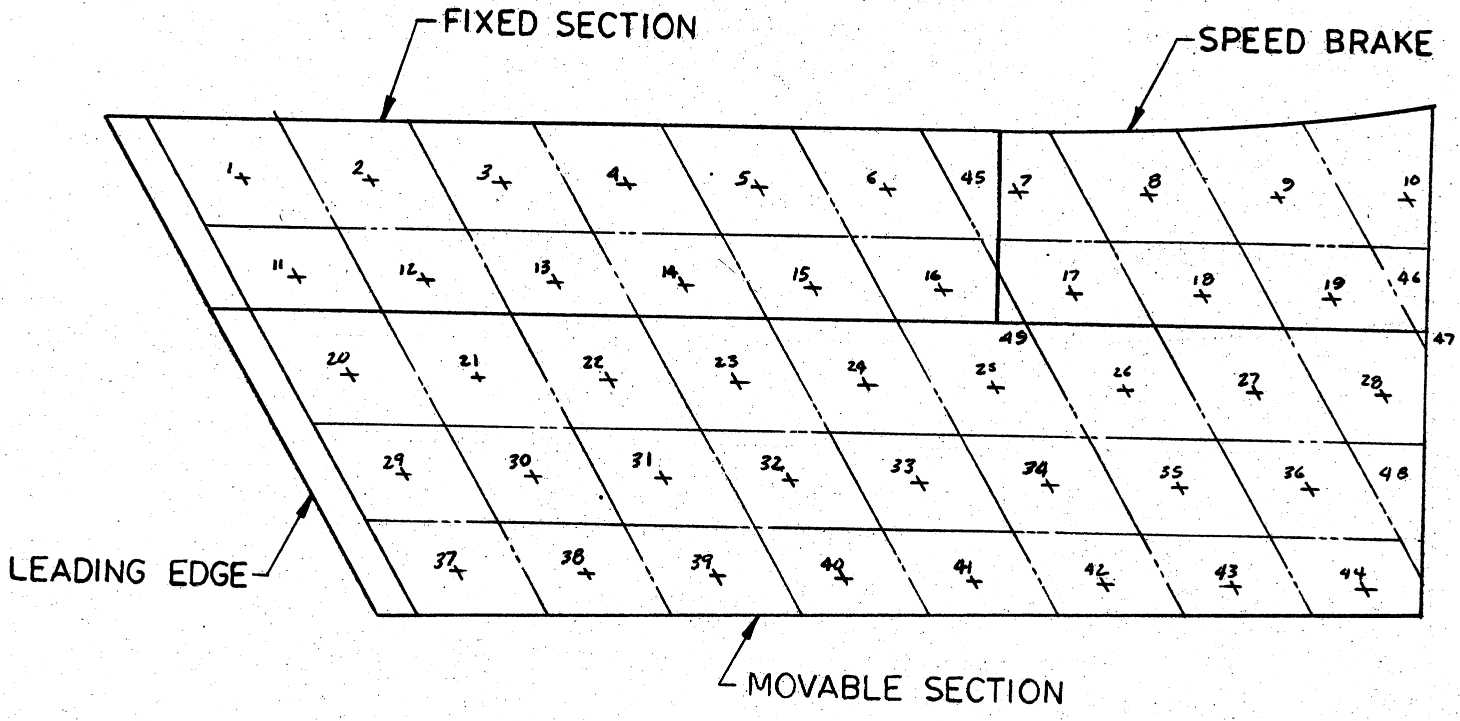

ABLATOR WEIGHT GRID
LOWER VERTICAL STABILIZER
FIGURE VI4

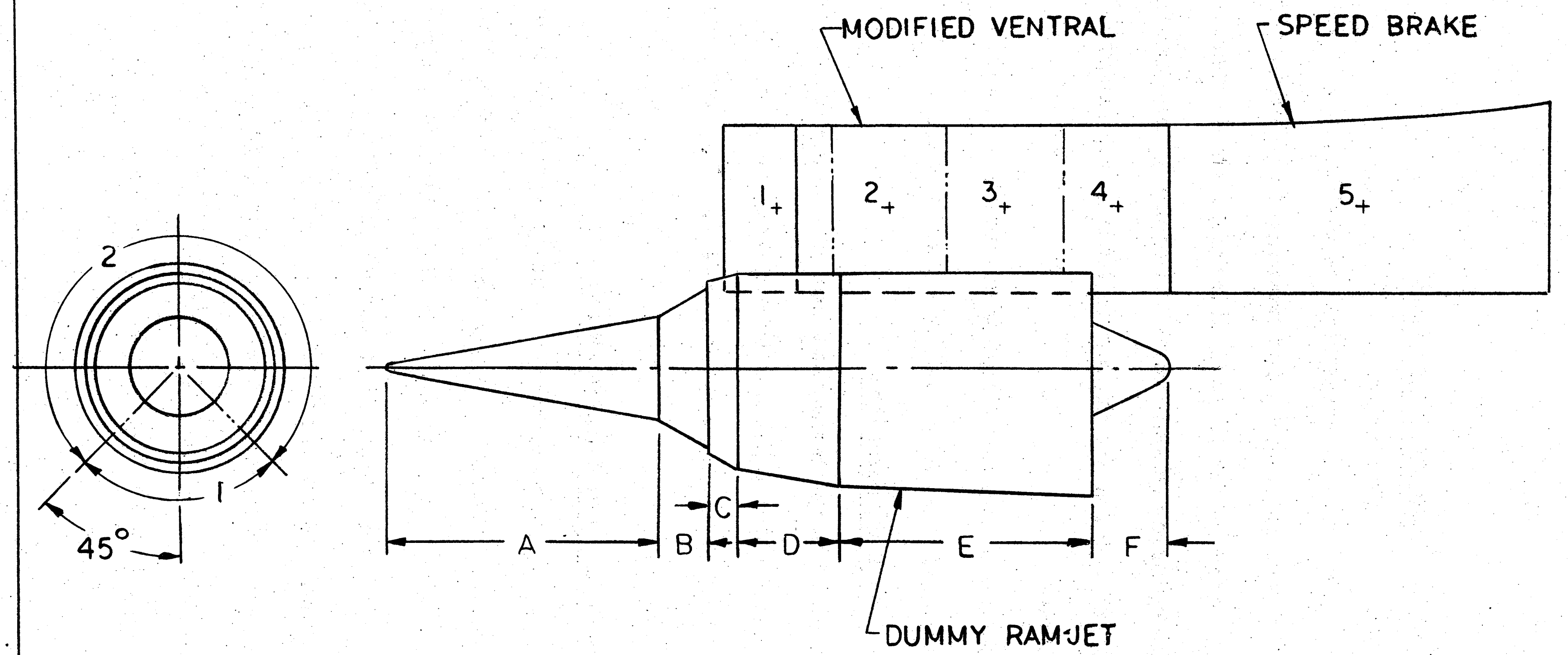

ABLATOR WEIGHT GRID

MODIFIED VENTRAL & DUMMY RAMJET

FIGURE VI-5

VII. DESIGN AIDS

Three primary categories of support were utilized throughout the program to provide the data necessary for continued evolution of the thermal protection system for the X-15-2 aircraft. These were: (a) The test facilities and laboratories of the Martin Company, (b) Test flights of the X-15-2 aircraft, and (c) The computer facilities and analytical programs for support of the above.

This report section contains a brief description of these areas as applicable to, and employed in the ablation system design.

A. Test Facilities and Laboratories

During the design of the ablation system, the capabilities and equipment of numerous Martin Company facilities were utilized. No additional equipment items or test facilities were required for the work performed under this program.

1. Plastics and Ceramics Laboratory:

This laboratory is concerned primarily with the formulation and development of non-metallic components for space vehicle and missile applications. Specialized products have included: honeycomb and bonded assemblies, heat shield ablators and reentry materials, antenna window and radome configurations, and thermoelectric elements. Resins are used as impregnates for reinforced materials of glass cloth, fibers, flakes, asbestos and alumina-silica compounds. Filler materials are prepared to increase heat resistance, decrease density or improve ablation characteristics. Antenna window materials have been developed to exhibit the proper electrical, physical, thermal and mechanical properties up to 4000° F. Ceramic materials have been developed to: a) attach ceramic materials to substrates, b) provide coatings for high thermal emittance characteristics, c) utilize lightweight ceramics and ceramic foams and d) provide high temperature ceramic cements.

All ablator material formulation, test specimen and molded detail part fabrication were performed in this laboratory.

The primary facilities available in the Plastics and Ceramics Laboratory include the following items:

(a) Platen Press, C.A. Lawton Company -- An electrically-heated, hydraulic press of 150 tons capacity; platen size is 29" x 38"; temperature range 70 to 500° F.

(b) Platen Press, Steam Heated -- A steam heater, hydraulic press of 125 tons capacity; platen size 20" x 36"; temperature range 70 to 350° F.

(c) Platen Press, Laboratory Size (6 available) -- Capacity 20 tons; platen size 9" x 12".

(d) Autoclave, Devine -- Size approximately 3' x 2' x 3'; temperature 400° F max.; pressure 200 psi max. (Fig. VII-1).

(e) Oven, Aminco (4 available) -- Size 18" x 18" x 18"; temperature 400° F max.

(f) Oven, Aminco, Large -- Size 18" x 36" x 27"; temperature 400° F max.

(g) Oven, Young Company -- Size 30" x 36" x 17"; temperature 400° F max.

(h) Oven, Industrial Ovens Inc. -- Size 24" x 24" x 24"; temperature 400° F max.

(i) Oven, Gruenberg -- Size 18" x 18" x 24"; temperature 400° F max.

(j) Hydro Finish Machine, Pangborn -- Abrasive blasting with a water-suspended slurry; used for cleaning and metal preparation for bonding.

(k) Extrusion Machine, J. R. Boaz Company -- For the extrusion of ceramic powders in simple shapes.

(l) Kiln, Harper Corporation -- Size 12" x 8" x 24"; temperature 2500° F max.

(m) Kiln, Leco -- Size 4" x 4" x 8"; temperature 2500° F max.

(n) Blender (dry), Patterson-Kelley -- Mixing of ceramic and plastic powders.

(o) Mixer, Sigma Blade, Baker-Perkins -- Mixing of wet ablator materials.

2. Thermal Properties Laboratory:

The laboratory facility described herein was established to provide supporting data on the thermal properties and environmental simulation properties of materials and components.

a. Thermal Expansion:

Thermal expansion can be measured with quartz tube dilatometers (Fig. VII-1) and an interferometer dilatometer (Fig. VII-2), from cryogenic temperatures to 1800° F. The interferometer dilatometer, usually associated with tests of rigid materials, was used successfully to measure the expansion of a silicone rubber to 300° F. The interferometer measures dimensional changes as small as 1.075×10^{-5} inches (half the wave length of the mercury green band).

b. Conductivity:

A modified alundum guarded hot plate (Fig. VII-3) is used to determine the thermal conductivities of materials from 1500° F to -300° F. Ablators and foamed ceramics are a few of the materials evaluated in this apparatus. In line with other modifications to the guarded hot plate, which were made to increase the accuracy of test results, a new test technique has been adopted. The new method involves the use of heat resistance differences developed and used successfully in the Heat Transfer Laboratory of the National Bureau of Standards. Test results were duplicated on our apparatus within 1% on a silicone fiberglass material sent to the Bureau for thermal conductivity measurement comparison.

In the cut-bar method (Fig. VII-4) of thermal conductivity dense materials are tested by comparison with standards of known thermal conductivity from 200° F up to 3000° F. At higher temperatures a difficult problem exists in such materials as ceramics in differentiating between energy transmitted by conduction and energy transmitted by radiation through the material. Specimens in this facility can be tested in vacuum or inert atmosphere for k values from .001 to .55 cal. cm.$^{-1}$sec.$^{-1}$°C^{-1}. The precise measurements required to determine the differential temperature gradient through the standards and sample are made with the aid of platinum rhodium thermocouples and a K-3 potentiometer to 0.1 degree C. The absolute temperature measurement of the test specimen is restricted to thermocouple limitations. A system of guard zones insures parallel isotherms in a stack consisting of standards and test sample. The standards act as metering bars which determine the heat flux to which the test sample is subjected. Successful measurements of thermal conductivity have been made of strontium titanate, barium titanate and alumina by this method. The thermal conductivity of the sample is determined by knowing the heat flux intensity and the thermal gradient.

c. Conductance:

Heat conductance is measured in a facility (Fig. VII-5) providing -100° F on the cold side and up to 1000° F on the hot side of a composite test panel. Heat flux rate is then expressed without the thickness parameter. Heat transfer data of honeycomb panels and sandwich type construction of wall panels are obtained in this facility. A standard block of Armco iron is used to determine the heat flux passing through the sample. The conductance of the sample is then calculated from the known heat flux intensity and the experimentally determined thermal gradient.

d. Specific Heat:

Specific heat determinations at temperatures from -320 to 3000° F can be made successfully by the drop method (Figs. VII-7 and VII-8), in which heat losses, during transfer of the sample to the calorimeter, are minimized. A straight-through tube from furnace to calorimeter is provided, ending in a receiver in the calorimeter. Radiation loss from the sample, after the drop, is prevented by a specially-designed gate in the top end of the receiver. Specific heat and enthalpy of foamed ceramics, metals, and char resulting from exposure tests of ablators are applications for which this facility is suitable.

e. Heats of Combustion:

Heats of combustion of ablators and char are measured in an adiabatic bomb calorimeter (Fig. VII-9). Maximum accuracy of this facility is obtained by electronic control of the matching of the temperature of the adiabatic jacket to that of the calorimeter. Reproducibility of consecutive tests can be achieved with a deviation less than 0.5%. The sample is placed in a special alloy metal container or bomb and pressurized to 25 to 30 atmospheres with oxygen gas. The standard test procedure is followed where the heat of combustion is measured by accurately determining the temperature rise of a known quantity of water when the sample is burned. Of special interest is the heat of combustion of char formed on ablative heat shield material during aerodynamic heating. The apparatus can also be adapted without major modifications to testing explosives, high energy rocket fuels, and the chemical analysis of several elements in miscellaneous compounds.

f. Spectral Absorptance and Emittance:

The Gier Dunkle facility (Fig. VII-10) measures reflectance of specular versus non-specular or diffuse coatings. An integrating sphere and heated cavity are used which are convenient devices for measuring the total reflectance of opaque coatings of different degrees of curvature, specularity, and diffusivity. In this facility, a sample is exposed to a radiation source and evaluated from .25 to 25 micron wave length.

g. Total Normal Emittance:

Total normal emissivity is measured (Fig. VII-11) on small samples (7/16 inches diameter by .03 ± .01 inches thick) positioned on a heating stage. Emissivity is expressed as a ratio of thermal radiation of the sample in the total spectrum, to the value of thermal radiation of a standard black body at the same temperature.

h. Total Hemispherical Emittance:

The total hemispherical emittance apparatus (Fig. VII-12) consists of a liquid nitrogen cold wall vacuum chamber in which the heated test sample is suspended. Vacuum is achieved with a 6-inch oil diffusion NRC pump system fitted with a liquid nitrogen cold trap to minimize diffusion pump oil back streaming. The pressure is measured in the chamber by an ionization gage. The interior surfaces of the cold shroud are sand blasted and coated with an optical black finish to achieve a maximum absorption coefficient and minimum reflected radiation. Temperatures of the wall and test sample are monitored with thermocouples spot welded or mechanically attached on the surfaces. The sample is suspended within the vacuum chamber and maintained at the desired temperature level with a measured amount of electrical power.

3. Instrumental Laboratories

a. The Mass Spectrometry and Gas Dynamics Laboratory:

This laboratory was established to study the products and mechanisms of ablation. Its principal features include a capability for high speed analysis of gaseous products and equipment to study the production of volatiles by vaporization, decomposition reactions, pyrolysis, and ablation.

The products of pyrolysis are trapped on the column of a gas chromatograph. The individual elutrients are then analyzed with a Bendix time-of-flight mass spectrometer which produces 10,000 individual analyses per second of both positive and negative ions. Single and dual column Perkin Elmer gas chromatographs are used.

A Knudsen Cell supplies volatile components by heating samples at temperatures to 2500° K. The stream of volatiles from either the Knudsen Cell or the gas chromatograph is directed to the source chamber of the mass spectrometer. Here it is ionized and bunches of ions are accelerated along an evacuated tube. Since lighter ions are more easily accelerated, they arrive first at the collector and the device essentially weighs the products by measuring the time-of-flight from the acceleration to the collector.

Vapor pressures, rates of formation and degradation of species, activation energies, and heats of vaporization can be determined.

The gas-chromatograph-mass spectrometer (Fig. VII-13) approach is supplemented by experimental apparatus designed to study the reaction of gas with the char produced by ablation and the reaction of char with filler materials in the ablator. The addition of ceramic filler to the ablative plastic will lead to high temperature reactions between the char and filler and will alter the char surface on which reactions take place.

Thermogravimetric analysis and differential thermal analysis are also used to determine decomposition temperatures as well as to study the nature and rate of each reaction. (Figs. VII-6 and VII-11).

An Aminco Thermo-Grav unit is capable of automatic recording of thermograms to 1000° C for studies in vacuum or controlled atmosphere. Two additional units have been constructed for high and low speed thermogravimetric analysis. The high speed TGA unit uses a Cahn electrodynamic balance and an arc image furnace capable of producing temperatures above 2500° C. Samples can be heated in vacuum at rates up to 300° C/sec. and the products analyzed continuously by mass spectrometry.

In addition to kinetic studies of ablation phenomena the gas chromatograph-mass spectrometer combination has been used to determine trace contaminants in space chambers.

4. Mechanical Properties Laboratory:

The laboratory facilities described below were established to provide supporting data on the mechanical properties of materials, components and structural configurations.

a. Static Properties:

The Static Properties Laboratory (Fig. VII-14) is arranged with basic and specialized equipment to evaluate a wide range of material at simulated environments of temperature, pressure, and load. Testing parameters include: tension, compression, shear, flexure, torsion, yield, ultimate, proportional limit, elongation, bearing, Poisson's ratio, moduli, and hysteresis loops. Stress-strain diagrams are the primary output of this laboratory, and are generally obtained under steady state conditions, which can be as short as 5 seconds or as long as one hour or more. We are able to control loading rates to 20 inches per minute, heating rates to 100° F per second, and load cycling rates to 20 per minute.

The Static Properties Laboratory is equipped with the following basic equipment and specialized accessories:

(1) Six Universal testing machines with capacities from 5,000 to 400,000 lbs.

(2) Chambers and furnaces in the temperature range from 3000° F to -452° F.

(3) Strain and deflection, sensing and recording devices with sensitivities as fine as 0.000005 inches.

(4) A 13 KW resistance heating power supply.

(5) An optron electro-optical strain measuring facility.

(6) A cold wall, vacuum, tension-compression furnace for use up to 4000° F.

5. Plasma Arc Facility:

This facility, located at Martin Baltimore, is equipped to conduct simulated aerodynamic heating tests. It includes two separate test chambers (Facility A & B) with two sets of control systems, power systems and vacuum systems interchangeable between them.

In this program, Facility B with the F-5000 arc generator and associated equipment were used for the initial material screening tests and the thermal performance testing. A brief description of this facility follows:

a. Facility B:

(1) Arc Generators

(a) F-5000 Arc Generator

The model F-5000 is a Thermal Dynamics gas and magnetically stabilized direct current arc generator. It is a universal design which can operate over a wide range of pressure, power, and enthalpy conditions, with respective limits of less than 1 atm to 68 atm arc chamber pressure, 20 KW to 1500 KW input power and 1000 to 28,000 Btu/lb gas enthalpy at the exit of a three-inch nozzle.

The electrode assembly consists of a water-cooled thoriated tungsten cathode and cylindrical copper anode. Several cathode designs (stick, flat, and well types) permit use of this basic equipment over a wide range of pressures. The anode assembly consists of a number of cylindrical segments arranged in tandum with one unit electrically isolated from the overall system. The "floating" section acts to fix the arc length and inherently increases system voltage and operating efficiency. The anode arc foot point is magnetically driven with an external field coil having a variable intensity from 300 to 1500 gauss.

Gas injection and operating gas operating gas limits are basically the same as that described for the M-4 arc generator. The system is also capable of operating in an oxygen rich (up to 80% by weight) or carbon dioxide atmosphere. Firm plans have been initiated to define the CO_2 limitations.

(b) L-1500 Arc Generator

This unit is primarily a high pressure (100 atm) arc heater from the Thermal Dynamics Corporation. It is intended to provide an expansion of the model F-5000 high pressure capabilities. Significant features of this equipment are as follows:

1) Cylindrical copper-copper electrodes as standard hardware but with the capability to operate on tungsten-copper in various configurations.
2) Double magnetic coil to spin the cathode and anode arc footpoints.
3) Capability to operate on straight air, synthetic air, helium, argon, CO_2, and other gas mixtures including high concentrations of oxygen.
4) Capability to operate from one to one hundred (100) atmospheres arc chamber pressures. Minimum nozzle exit enthalpy of 1500 Btu/lb at 100 atmospheres.

(2) Test Chamber - Facility B

Facility B test chamber is a water-cooled double jacketed cylindrical tank 48-inches in diameter and twelve (12) feet long. It houses two 7" x 15" view ports located diametrically opposite on the horizontal centerline and slightly downstream of the nozzle exit plane. A 20-inch access port is located at the bottom tank centerline for the purpose of entry and maintenance. Two view ports and two single dummy ports are located on the end plate for viewing the model front face with pyrometers or cameras and to mount auxiliary equipment. The tank is slit along the top centerline and is flanged to support a second tank in piggy-back fashion. The upper tank houses a model/instrument support and insertion mechanism.

The test chamber is structurally designed for full vacuum or 35 psig.

(3) Model Housing and Insertion Mechanism

A unique model-holder and insertion mechanism is contained within a separate vacuum and pressure tight test cell mounted to the test chamber, see Fig. VII-15. The device serves to isolate the test models from the high temperature gas during arc generator calibration runs and to provide means to rapidly and sequentially insert several models into the test stream without extinguishing the arc. The mechanism supports three model holders, a calorimeter, and pitot probe. Each can be selectively inserted, traversed laterally and longitudinally, and retracted from a remote control station.

Pertinent features of this equipment are as follows:

(a) Five (5) independent support arms, i. e., one pitot support, one calorimeter support, three model supports.

(b) Remote control (automatic and manual).

(c) Controlled longitudinal motion from the nozzle exit plane to 13 inches downstream at a speed of 1"/sec. Traverse control over a range of ± 1-1/2".

(d) Insertion speed - variable up to six (6) feet/sec with a positioning accuracy of ± .010 inch.

(e) Model capacity: 3; size: 8 inches (for full retraction).

(f) Maximum model end head: 600 lb.

(4) Power Supply

The one megawatt power package previously described for Facility A also supplies d. c. power to either the F-5000 or L-1500 arc generators of Facility B.

b. <u>Plasma Arc Support Equipment:</u>

(1) Control and Instrumentation

Control and instrumentation for the plasma arc systems are arranged in a centralized modular complex with independent control equipment for the M-4 and F-5000 arc heater, see Fig. VII-16.

Emphasis is placed on precision measurements wherever practical and in particular where arc generator performance requires accurate measurements of test parameters for reliable, repeatable testing conditions. The instrumentation is geared to provide system repeatability to within ±5% of the established test condition.

(2) Data Acquisition and Recording

Data recording equipment although centralized has the capability to simultaneously service both test facilities. Maximum versatility is achieved by switchboard type operations and multiple switching circuits with controls displayed on the instrumentation panel, see Fig. VII-17.

A 50-channel data acquisition system is used to record the test data and this data is processed on an IBM 7094 computer.

Some of the salient features of the available instrumentation equipment include:

(a) Fifty-channel analog data acquisition system capable of recording rates to 60 channels per second with an overall system accuracy of ± 0.1% FS. A high system input impedance permits direct recording of the low level inputs such as thermocouples and strain gages without adverse loading of the input circuit. Output data on magnetic tape is directly compatible with an analog computer and automatic plotting program.

(b) Strip chart recorders with potentiometric input circuits and 0.25% FS accuracy for direct visual display of selected facility or model parameters.

(c) Thirty-five mm camera with automatic exposure control over 11 f-stops and a data slate display on each frame of film, including test model number, elapsed test time, and other identification data.

(d) Automatic thermocouple reference junction which maintains a constant reference junction temperature for up to 50 thermocouples of any type.

(e) Direct writing oscillograph for high speed recording up to 60 cps at high input impedance.

Plasma Arc test data is recorded on low density, BCD coded, magnetic tape from a Systrac 160E1 Data Acquisition System. The data consists of analog voltage inputs versus time, which are converted to engineering values versus elapsed test time through an IBM 7094 computer program number TB-080. Output consists of a tabulated list-out and and a magnetic type suitable for input to a Benson-Lehner J-plotter utilizing program ZB-052. Final output from the plotter is in the form of automatically plotted graphs of engineering units versus elapsed test time.

Additional signal conditioning equipment is available for most types of instrumentation.

Exposure time is displayed on a digital elapsed time indicator which is directly controlled by model holder position. The timer is started on model insertion when the model reaches the stream centerline and is stopped when the model is withdrawn from the stream and/or the arc is turned off. All data systems are sunchronized to this timing signal, including the data acquisition system, strip chart recorders, direct writing oscillograph and the 35-mm camera. A predetermining feature allows the desired test time to be preprogrammed such that the model holder is automatically withdrawn when the predetermined time is reached.

(3) Gas Supply System

A liquid oxygen and nitrogen station coupled with a high pressure vaporizer/compressor system provides up to 21,800 scfh of either gas at a controlled temperature of 70° F ±5° F. The system has the capability to deliver mixtures of these gases at rates up to 0.9 lb/sec at 3200 psig.

Gas storage capacity is 35,000 scf of nitrogen, and 30,000 scf of oxygen at 3500 psig with automatic recharging at a rate of more than 21,000 scfh. Gas flow rates are controlled and displayed at the test facility control center. Liquid storage provides an equivalent nitrogen gas supply of 310,000 scf and an equivalent oxygen supply of 250,000 scf.

A 6-ton liquid carbon dioxide supply station coupled with a vaporization circuit is available. CO_2 gas can be supplied to the arc generator at flow rates up to 900 lb/hr at 1000 psig under controlled temperature conditions.

Argon and helium manifolding supply systems utilizing standard high pressure cylinders are available.

c. Vacuum System:

Two vacuum systems form an integral part of the plasma arc laboratory. One is a 3300 acfm mechanical pumping system consisting of a 900-cfm Beech Russ roughing pump and a 2900-cfm Roots blower. A five stage steam ejector system capable of operating up to 95,000 acfm supplies the vacuum requirements above the limits of the mechanical equipment.

Both vacuum systems are coupled to the test facilities through a manifolding arrangement designed to permit operating either facility with either vacuum system. Appropriate valving and interlock circuit permit rapid, safe transfer of any vacuum system to either test facility.

6. Radiant Heat Facility:

For heat fluxes up to 120 Btu/sq ft-sec, a facility which uses T-3 radiant heat lamps in a water cooled reflector assembly is available. Power to the lamps is controlled by Research Inc., ignitron power controllers. Specimen surface temperatures in the 3000° F to 3500° F range can be reached and maintained for periods as long as 30 min., while fumes and smoke are drawn away from the specimen surface. Heating may be either a rectangular pulse or a programmed heat input. The units can provide a uniform heat input over the surface of a 6-in. by 6-in. specimen to full size structural components. Calibration equipment and instrumentation for thermocouple readout are available.

Radiant heat fluxes in excess of 120 Btu/sq ft-sec can be achieved in the Arc-Image Test Facility which employs a carbon arc heat source projected as a reflected image on the surface of the test specimen. Surface temperature can be varied from 2000° F to 5000° F by adjusting the position of the specimen with respect to the focal point (hottest area). The maximum test specimen which may be tested is a 1-in. cube. The focal plane of maximum temperature capability is approximately 1/4 in. in diameter, with a Btu input of up to 5000 Btu/sq ft-sec obtained from the 3.2-kw arc output. Heating rates are a direct function of materials emissivity, reflectivity, and transmissivity, and must be checked for each tested material. Heating rates may be programmed by moving the test specimen toward and away from the focal plane while the test is in progress. Materials with high surface emittance ($\epsilon = 0.9$) have been heated such that the surface temperature rose at a rate of 1000° F/sec.

Quartz lamps are arranged in different geometric shapes and sizes to suit the structural assembly being heated. Some standard heating facilities capable of heating small element type panels and materials are a permanent part of the facility. These heaters were utilized to flash test ablator panels when evaluating application process variables and high temperature contact adhesives.

B. Flight Tests of the X-15-2 Aircraft

During the program, it was anticipated that actual ablator designs could be evaluated by flight test to sequentially substantiate the protection system design and application methods. Unfortunately, the combination of aborted flights and loss of airborne instrumentation nullified much of the value from this method of design support.

The test applications, though they didn't provide quantitative data, did permit visual feedback of design performance and uncover some potential application difficulties. The extent of test ablator applications and the observations of each are summarized below.

1. First Test Flight:

The ablator application for evaluation on the initial flight test included the following:

a. A Mach 8 design application to one horizontal stabilizer.

b. A leading edge material evaluation on the ventral fin.

c. A bond line temperature evaluation application on the ventral right side.

d. A two step application on the ventral left side.

e. Test applications of hard point material.

f. Test applications of MA-25s repair material.

g. A coated UHF antenna.

h. High temperature bond line experiment on nose panels.

i. A protective application over main landing skids.

From this initial application, one primary observation was made. Application of sprayed ablator in thick overhead applications require a step build-up in thickness to avoid a heavy uncured layer of material. This method was not used for the first stabilizer application, and a bond line separation was encountered near the leading edge. Another stabilizer application using a multi-layer application technique eliminated this problem.

Failure of aircraft instrumentation prevented obtaining thermocouple response data, but visual inspection of the application showed general ablator performance as expected. Some localized delaminations were observed in the stabilizer application, and further modification was made to application technique to eliminate their occurrence. Figures VII-18 thru VII-23 show the salient features of this application.

2. <u>Second Test Flight:</u>

The second application was a continuation of the initial flight tested ablator features. The following features were incorporated to demonstrate the effectiveness of changes made following the initial flight.

a. A bond line temperature experiment on the fixed ventral.

b. A NASA window experiment on the left ventral side.

c. An application process variable experiment on the right speed brake.

d. A refurbishment study on the left speed brake.

e. A two-layer application on the movable ventral.

f. Hard point inserts and bearing pad installations.

g. Fuselage ablator panels to evaluate effects of external drop tank on ablator layer.

h. Skin temperature experiment on the fuselage nose panels.

An abortive flight of the X-15 completely negated obtaining usable results from these ablator experiments. It is significant to note, however, that the ablator was not removed from the aircraft, and has been successfully flown three times since the initial abort. Figures VII-24 and VII-25 show the ablator application prior and subsequent to the aborted flight.

C. Computer Facilities and Programs

1. Digital Computations:

The primary digital computational equipment used during this program was the IBM 7094-II Electronic Data Processing Machine. This computer has a high speed processor and a storage unit with the capacity of 32,768 words of 36 binary digits each. The computer is a stored program type with automatic floating point arithmetic capabilities. It is possible to execute 357,000 additions or 178,500 multiplications per second. It also has special features for rapid table lookup and simultaneous input, output and computation. Attached to the 7094-II are 12 magnetic tape drives, Model 729-VI. These units are capable of reading or recording 556 or 800 bits to the inch. A printer, Model 716, is attached to the computer and is used to direct the computer operator. Approximately 1800 subroutines are available to the Martin Company through our participation in SHARE.

An IBM 1460 System is also available for processing the tape input and output required for communication with the IBM 7094-II. It has four tape units attached to it, three of which may be shared with the IBM 7094-II. The IBM 1402 card reader and punch unit and the IBM 1403 1100-line per minute printer are also part of the IBM 1460. A second IBM 1460 is used to handle the printer overflow. The IBM 7070 Data Processing System is also available in the computer facility. For smaller and simpler computations, two IBM 1620 and one Bendix G-15 general purpose digital computers are available. The IBM equipment is leased by Martin.

The computing equipment includes a Benson-Lehner X-Y Plotter, Model J, with both magnetic tape and punched card input and four smaller Benson-Lehner X-Y Plotters, Models E, F and G with punched card input. This equipment automatically plots scientific data generated from both the 7094-II and the 1620.

2. Computational Programs:

Thermal analysis of ablative heat shields was accomplished by the use of the T-CAP-III and T-CAP-IV transient, charring ablator, digital computer programs. Both programs employ the analytical model described below; however, T-CAP-III performs a one-dimensional analysis in the ablative layer whereas T-CAP-IV has three-dimensional capability. Since both programs possess the capability of computing three-dimensional heat transfer in the substructure, T-CAP-III is used in areas where the heat flux and ablation material thickness is relatively constant with T-CAP-IV being employed when heating rates and ablator thicknesses vary rapidly over small distances, e.g., on leading edges.

The analytical model employed in these programs consists of a virgin plastic layer, a pyrolysis zone, a char layer, and, where applicable, a melt layer.

The ablative layer is considered to consist of a multilayer char, a pyrolysis zone and virgin plastic layer, all of which are characterized by the density profile. For general application, the capability of handling an arbitrary composite arrangement of ablator, insulation, and internal structure is included. The surface boundary conditions include arbitrary heating functions versus time arising from convection and radiation as well as surface burning, the transpiration cooling effect of the pyrolysis products, and the radiation cooling from the hot char surface. A program option is also available to describe the surface boundary condition as a temperature-time history. Surface recession resulting from surface burning of the char layer is included, and both the burning rate limited and the oxygen diffusion limited cases are considered. The nonablator material properties input data are considered either in the equation form as power series functions of temperature or in curve form as arbitrary functions of temperature. The ablator thermal properties input data are considered in curve form as functions of both temperature and density. The rate of change of the ablative layer density profile and the resulting pyrolysis products mass flow are calculated utilizing the reaction kinetics of the plastic with nth order reaction as determined from TGA data. Activation energies and rate constants must be provided.

The following are the equations programmed for finite difference solution on the IBM 7094 computer for arbitrary inputs of material properties and time-dependent heating and surface force environment.

a. Surface Heat Balance:

$$\begin{aligned} q(\text{conduction}) = {} & q\,(\text{convective}) + q\,(\text{radiation}) \\ & - q\,(\text{mass injection blocking}) \\ & \pm q\,(\text{burning or vaporization}) - q\,(\text{reradiation}) \end{aligned}$$

$$\begin{aligned} k\left(\frac{\delta T}{\delta x}\right)_{\text{surface}} = {} & h_{bl}\,(H_s - H_w) + \dot{q}_r - \dot{m}_v M\,(H_s - H_w) \\ & \pm r_c p_c\,\Delta H_r - \sigma\epsilon T_w^4 \end{aligned}$$

b. Ablative Layer Heat Balance:

$$\dot{q}\,(\text{stored}) = \dot{q}\,(\text{conducted}) - \dot{q}\,(\text{mass flow}) + \dot{q}\,(\text{pyrolysis})$$

$$\rho c_p \frac{\delta T}{\delta t} = \frac{\delta}{\delta x}\left(k \frac{\delta T}{\delta x}\right) - \dot{m}_v(x, t)\, c_{p_g} \frac{\delta T}{\delta x} + f_{\rho_p} L_p \frac{\delta \lambda}{\delta t}$$

c. Ablator Degradation:

In the T-CAP-III and T-CAP-IV programs, the material degradation is described by a nondimensional density, , which is defined as the fraction by weight that the pyrolysis reaction has to go to completion. The rate at which material degradation takes place is a function of the material reaction kinetics and the amount of reactant remaining.

$$\frac{\delta \lambda}{\delta t} = -k_r \lambda^n$$

where

$$\lambda = \frac{\rho - \rho_c}{\rho_p - \rho_c}$$

and

$$k_r = Ae^{-E/RT}$$

$$n = \text{reaction order}$$

The material reaction kinetics and the order of reaction are obtained for any particular material by thermogravimetric analysis (TGA). The ablator density at any point and at any time is then given by

$$\rho(x, t) = \lambda(x, t)\,(\rho_p - \rho_c) + \rho_c$$

where the flux of pyrolysis products is given as

$$\dot{m}_v(x, t) = -f\rho_p \int_0^X \frac{\delta\lambda}{\delta t}\,dx$$

where

$$f = \frac{\rho_p - \rho_c}{\rho_p}$$

d. Surface Recession:

Surface recession of an ablating material by any one of several modes: oxidation, melt flow, vaporization and sublimation, can be computed by the T-CAP programs.

Where surface recession is the result of char oxidation, the concentration of oxygen at the wall and the oxidation rate are calculated by solving the following simultaneous equations:

Burning Rate Equation

$$r_c = \frac{\left[p_e C_{o_2}\right]_w^n}{\rho_c}\, k_1 e^{-k_2/T}$$

where k_1 and k_2 are burning rate constants and the exponent n defines the reaction order. Usually $n = 1/2$ gives good agreement with experiment.

Oxygen Diffusion Equation

$$r_e = \frac{h_{net} L_e \left[C_{o_{2_e}} - C_{o_{2_w}} \right] \left[W_c / W_{o_2} \right]}{\rho_c}$$

where h_{net} is the net heat transfer coefficient after mass blocking has been accounted for.

For materials which form a viscous melt layer at elevated temperatures surface recession can occur due to the molten material flowing under the influence of aerodynamic shear forces. The surface recession due to the melt flow is given by:

$$r_{flow} = \int_0^y \frac{1}{R} \frac{d}{dx} (uR)\, dy$$

where

$$u = \tau \int_0^y \frac{dy}{\mu} + \frac{dp}{dx} \int_0^y \frac{y}{\mu}\, dy$$

τ = aerodynamic shear stress

dp/dx = local pressure gradient

μ = melt viscosity

R = local body radius

In general, these materials also lose material due to vaporization. The recession due to vaporization is computed by the following equation when the conditions of temperature and pressure are such that the molten layer is not boiling.

$$r_{vaporization} = \frac{h_{net}}{\rho_{melt}} \quad \frac{1}{M\left(\frac{P_{\ell}}{P_v}\right) - 1}$$

where

M = $\frac{\text{molecular weight of air}}{\text{molecular weight of vapor}}$

P_{ℓ} = local ambient pressure

P_v = vapor pressure at ablating surface

When, at a given pressure the vapor pressure approaches the local ambient pressure the molten layer begins to boil. Under these conditions the surface recession is again computed using the surface heat balance at a flow surface temperature, in this case the boiling temperature, at the given local pressure.

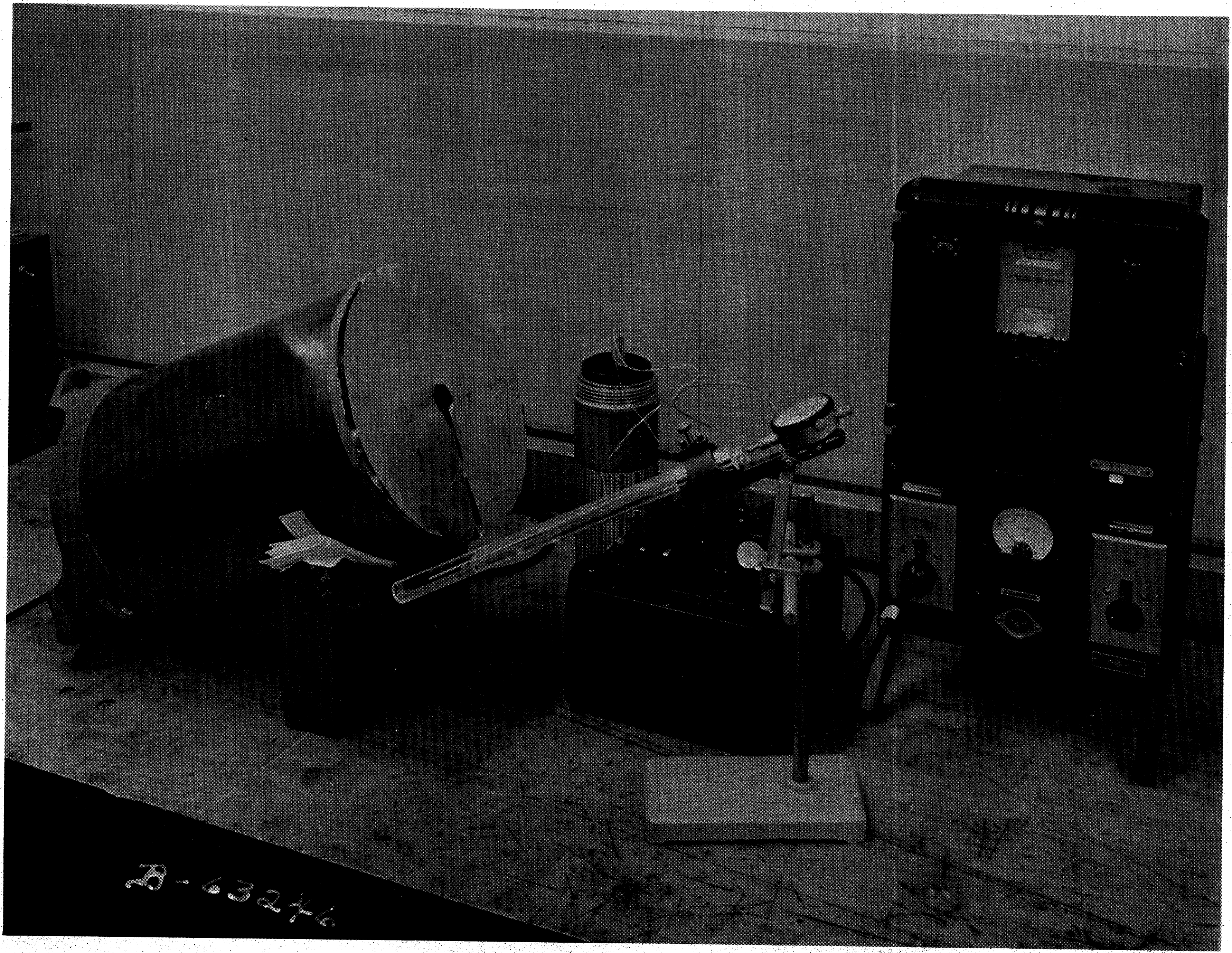

FIG. VII-1 QUARTZ DILATOMETER

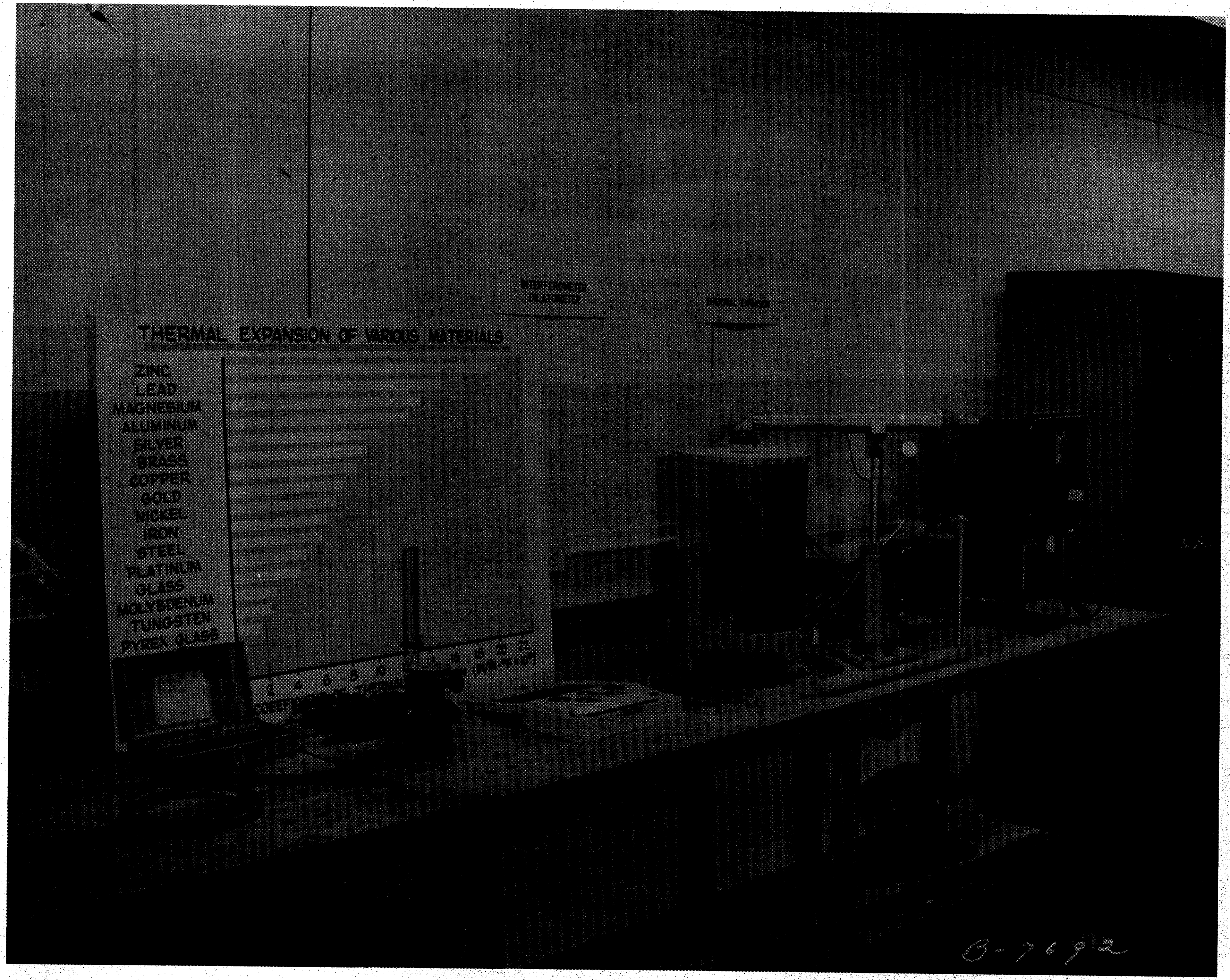

FIG. VII-2 INTERFEROMETER DILATOMETER

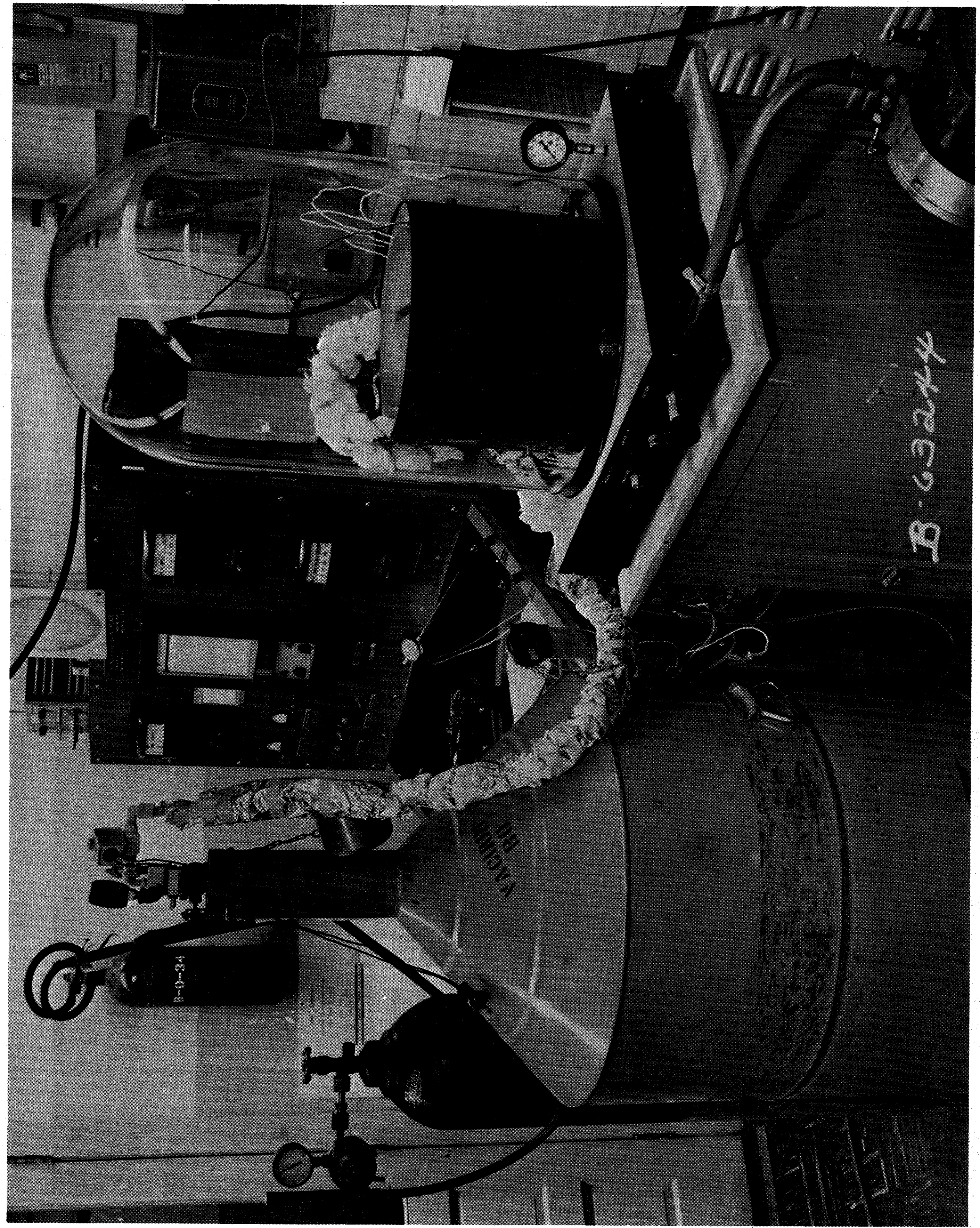

FIG. VII-3 GUARDED HOTPLATE

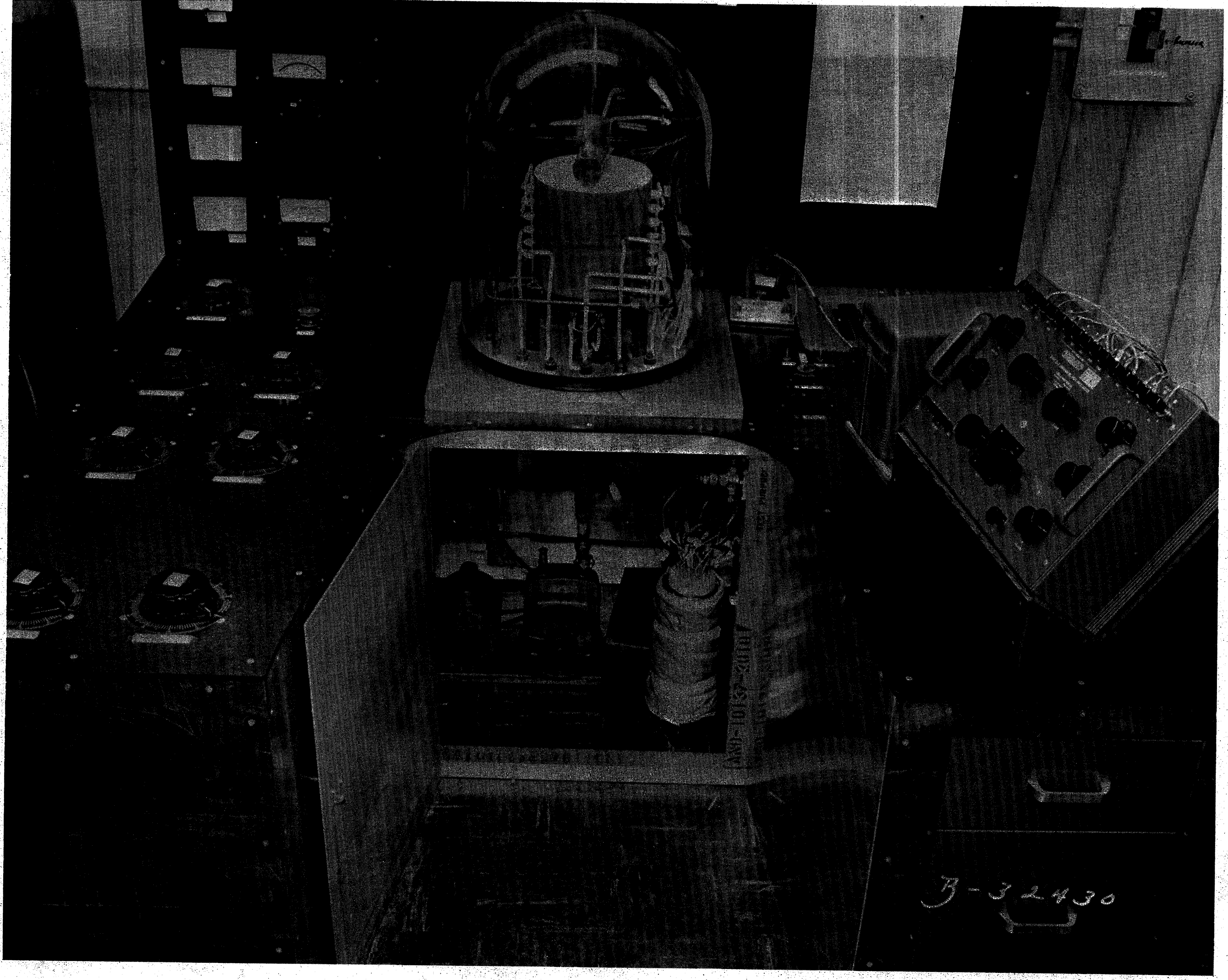

FIG. VII-4 CUT BAR THERMAL CONDUCTIVITY

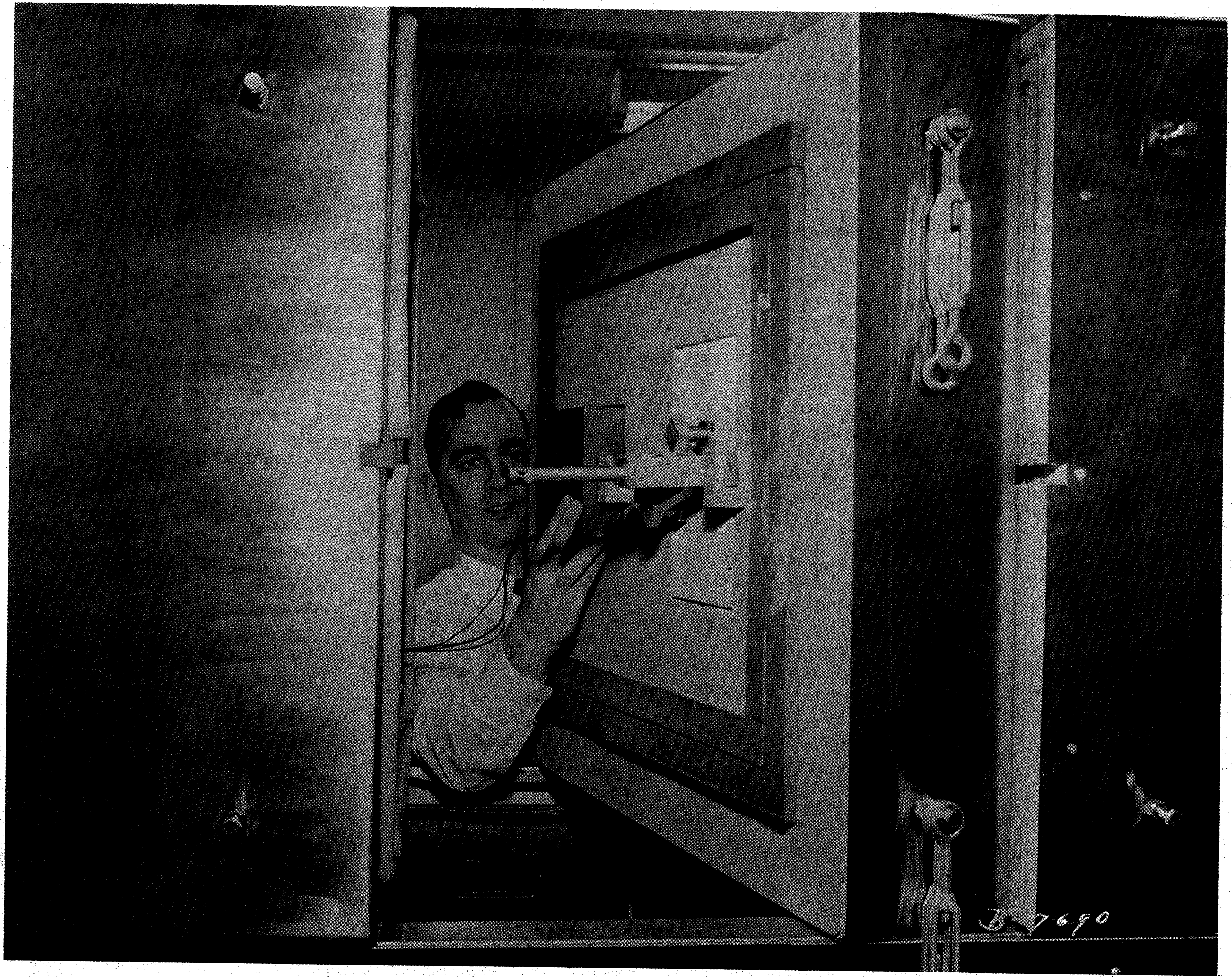

FIG. VII-5 THERMAL CONDUCTANCE APPARATUS

FIG. VIII-6 TGA APPARATUS

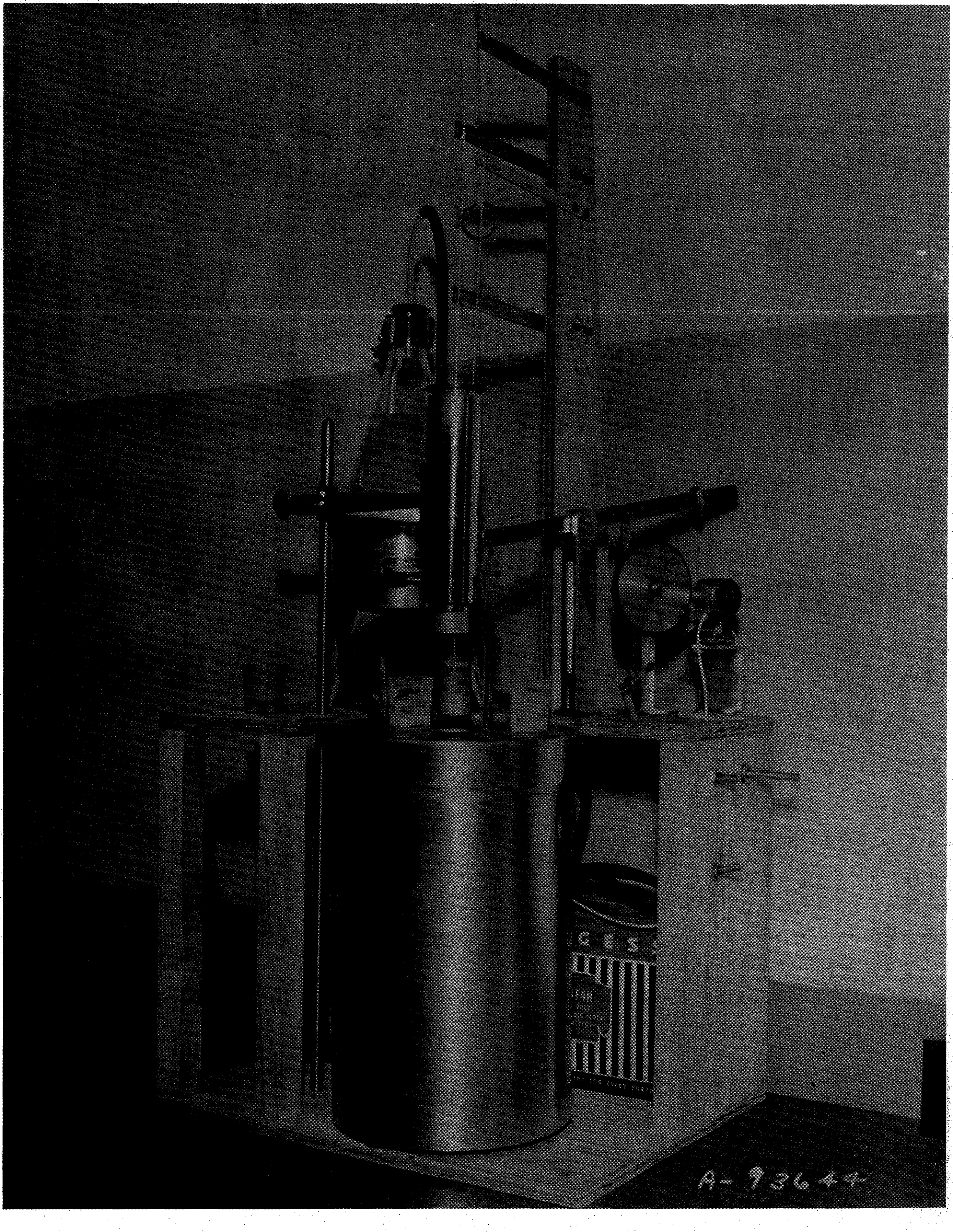

FIG. VII-7 STEAM JACKET DROP CALORIMETER

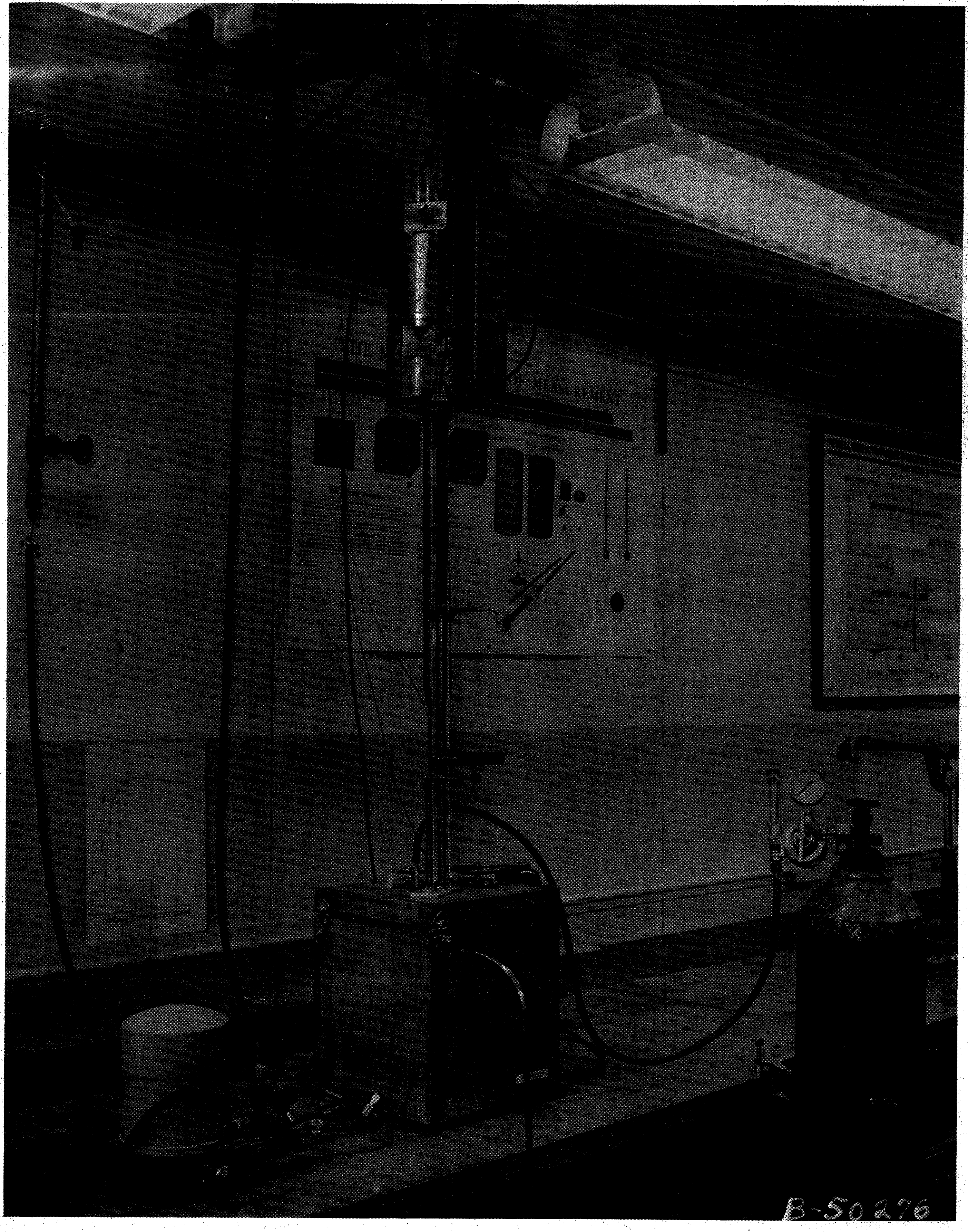

FIG. VII-8 ADIABATIC JACKET DROP CALORIMETER

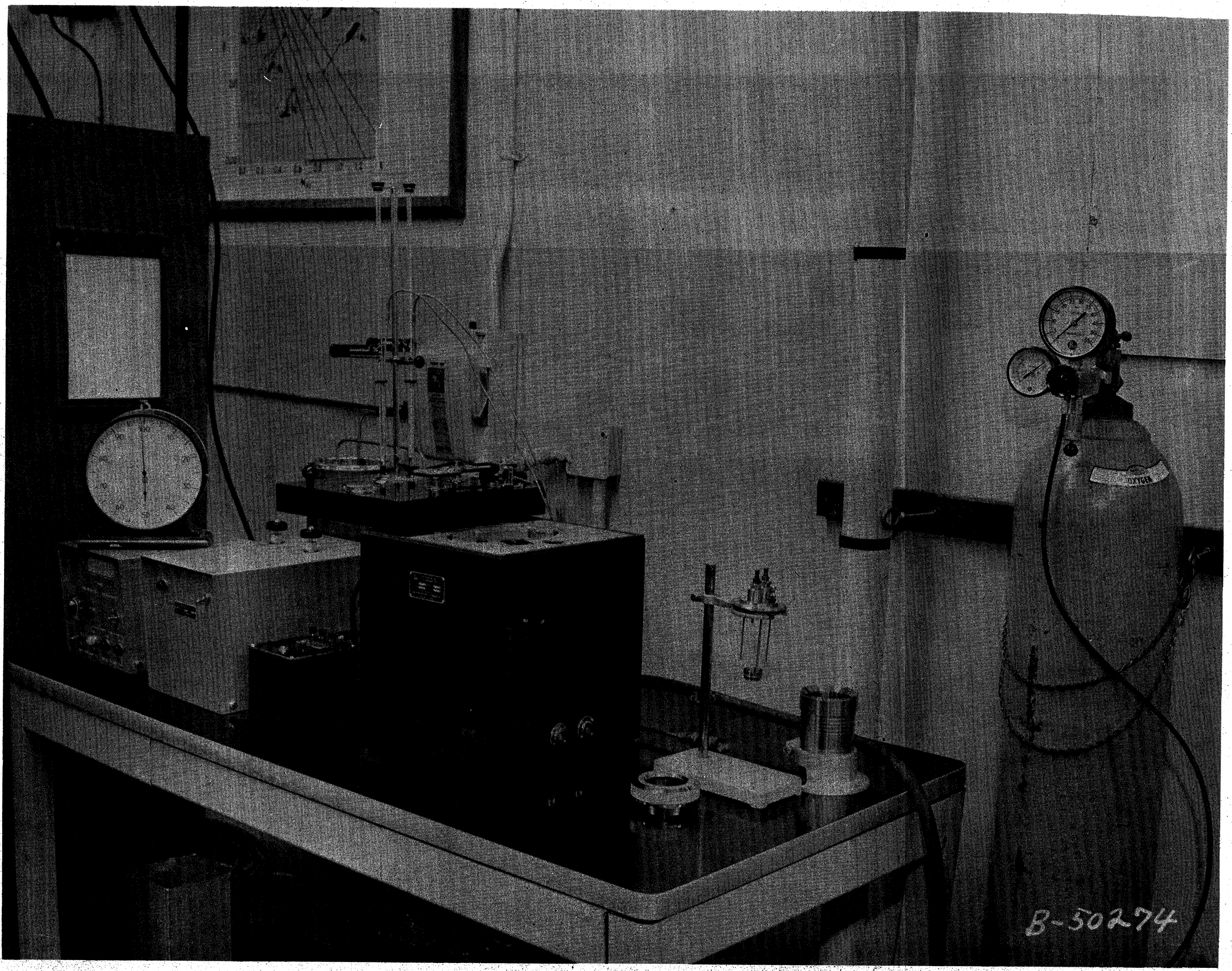

FIG. VII-9 BOMB CALORIMETER, ADIABATIC JACKET

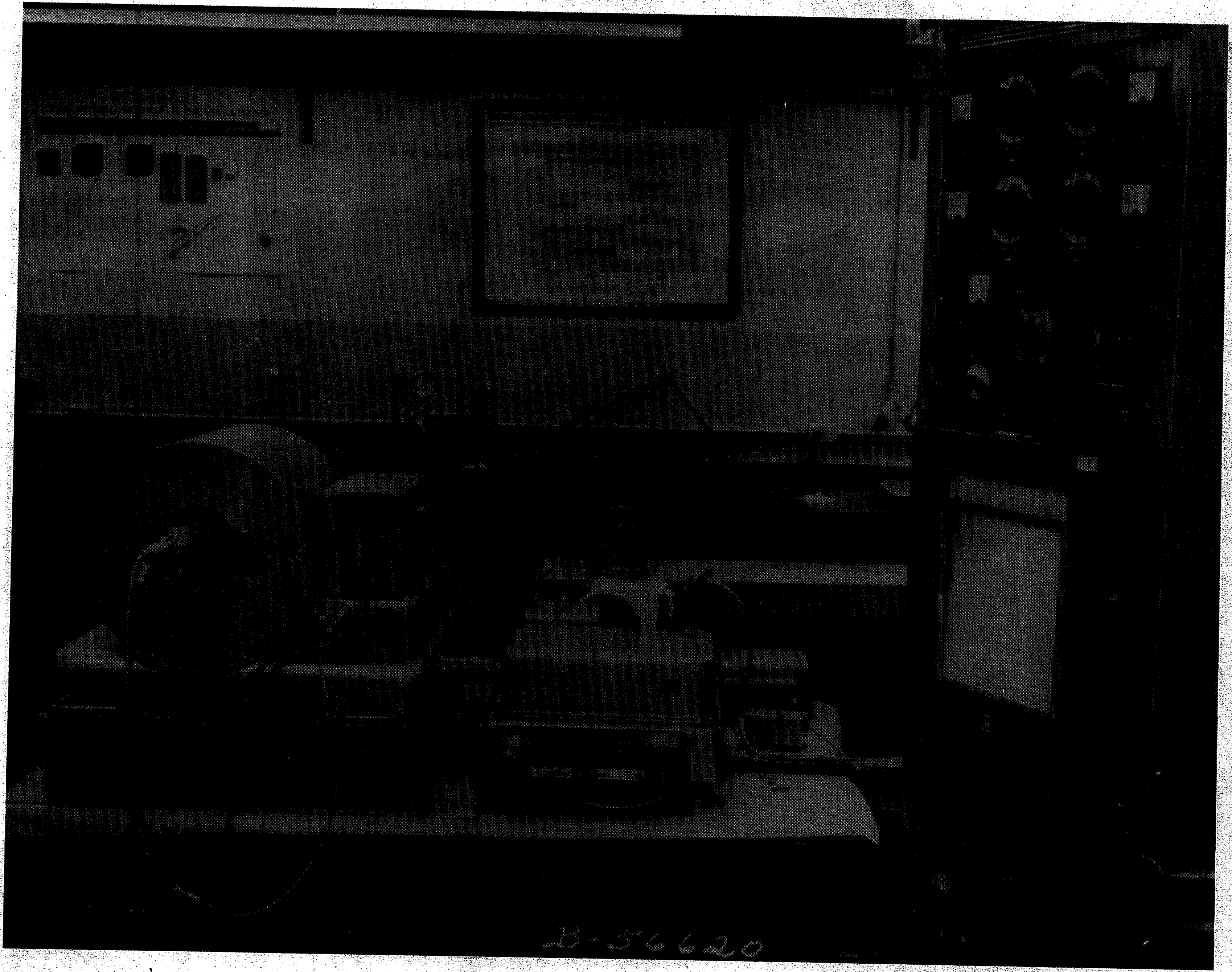

B-56620

FIG. VII-10 GIER DUNKLE TOTAL NORMAL EMITTANCE APPARATUS

Differential Thermal Analysis
From Ambient to 1200°C

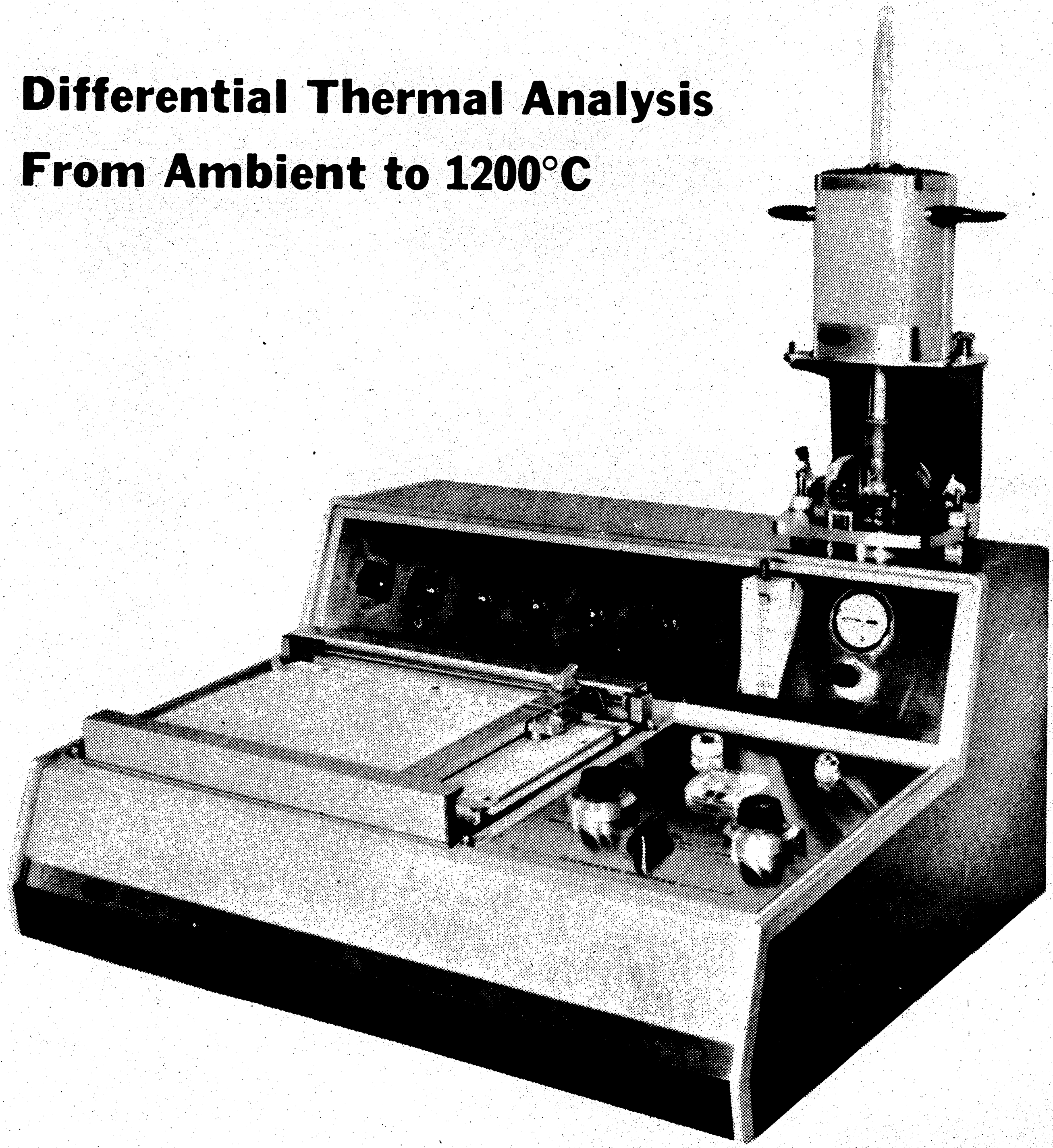

FIG. VII-11

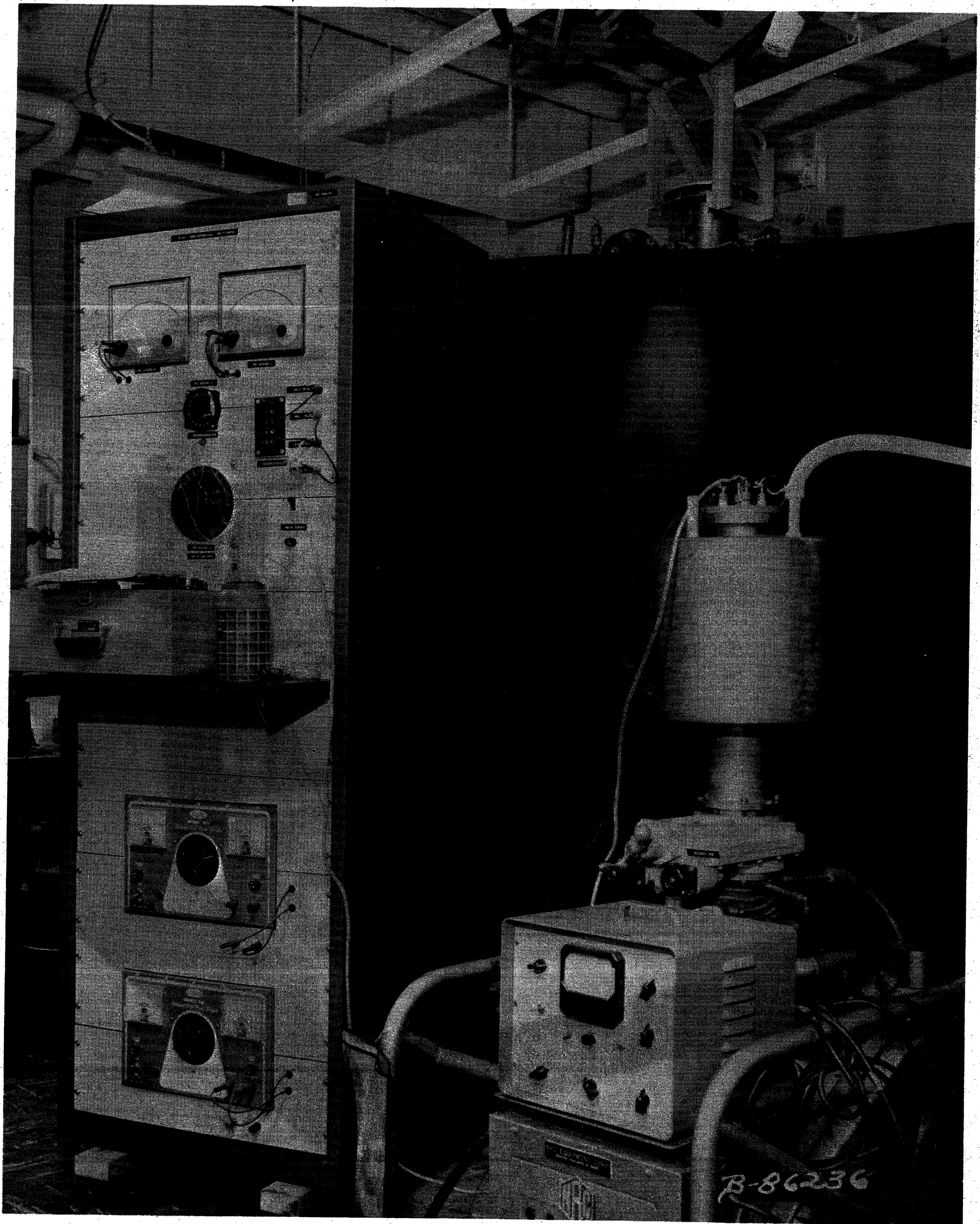

FIG. VII-12 TOTAL HEMISPHERICAL EMITTANCE APPARATUS

FIG. VII-13 MASS SPECTROMETER GAS CHROMATOGRAPH

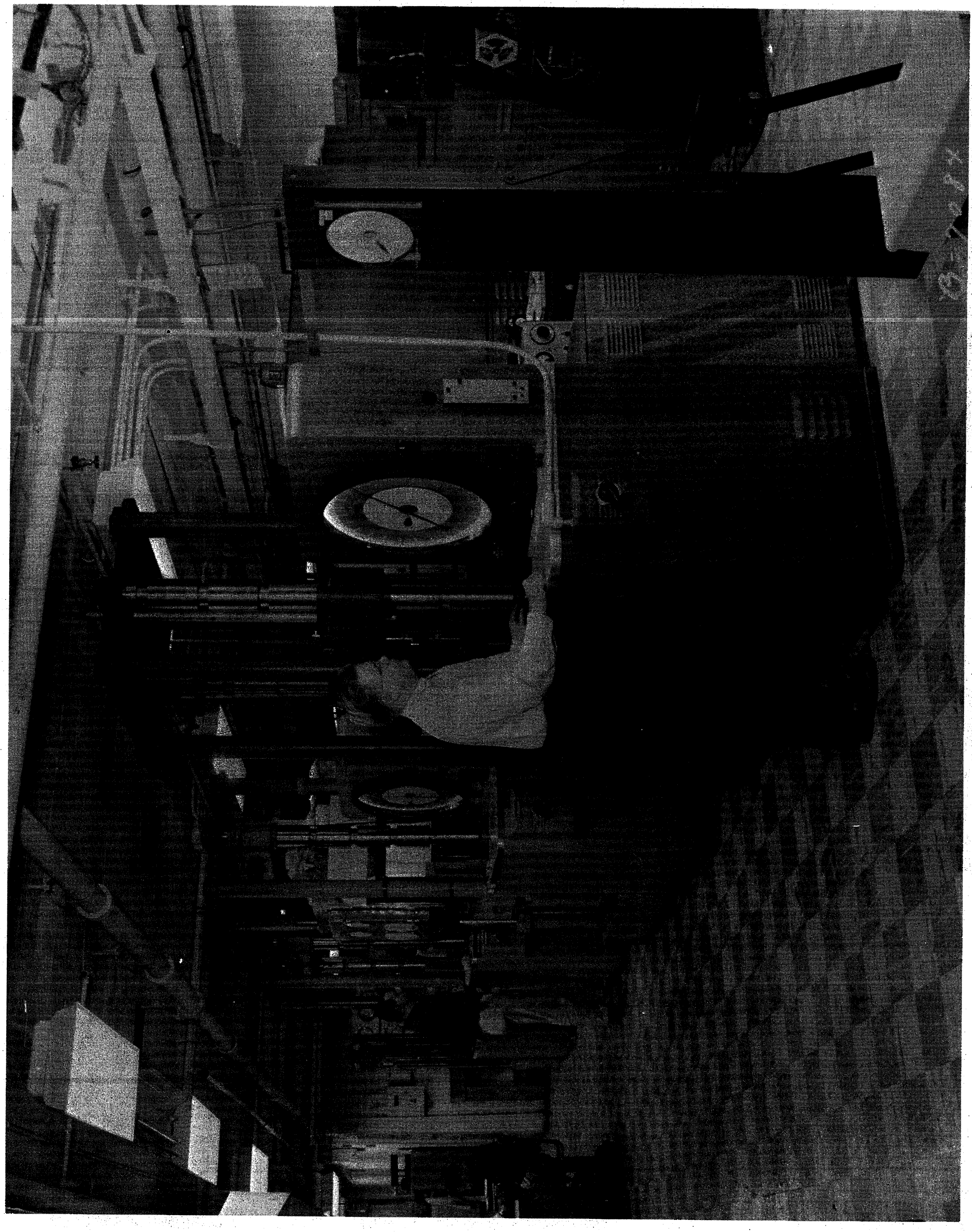

FIG. VII-14 MECHANICAL TEST LABORATORY

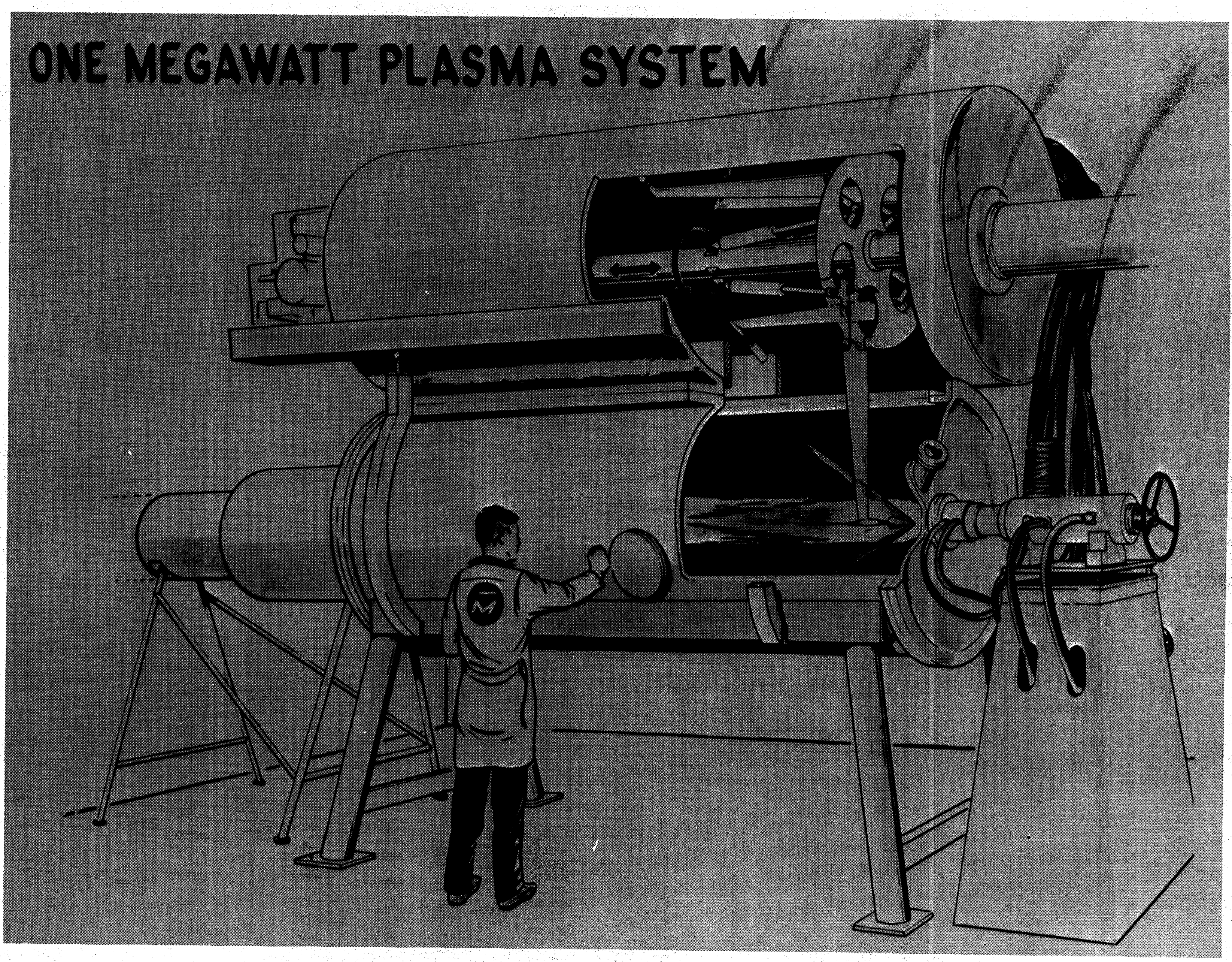

FIG. VII-15 PLASMA ARC FACILITY "B"

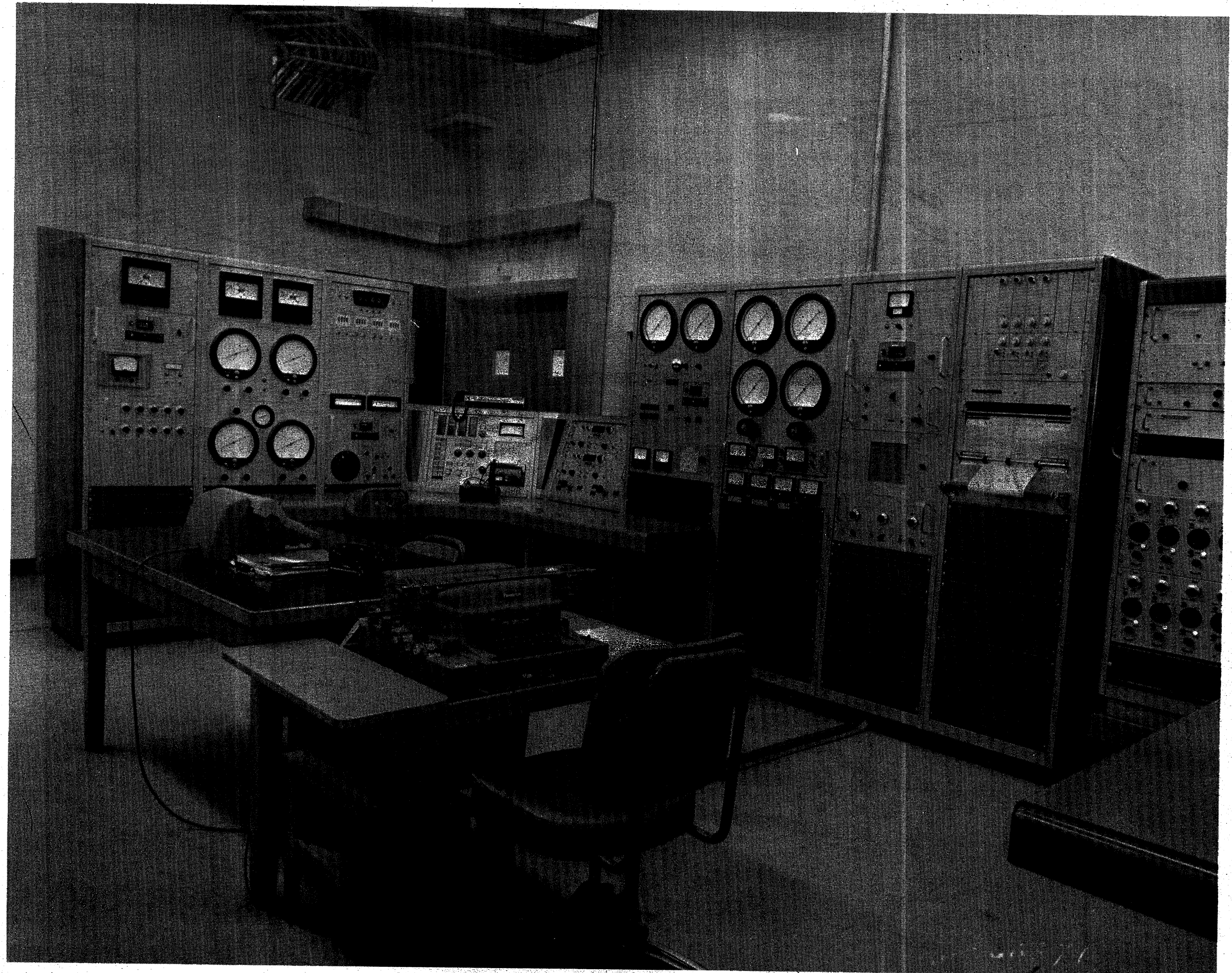

FIG. VII-16 TEST CONTROL CENTER PLASMA ARC

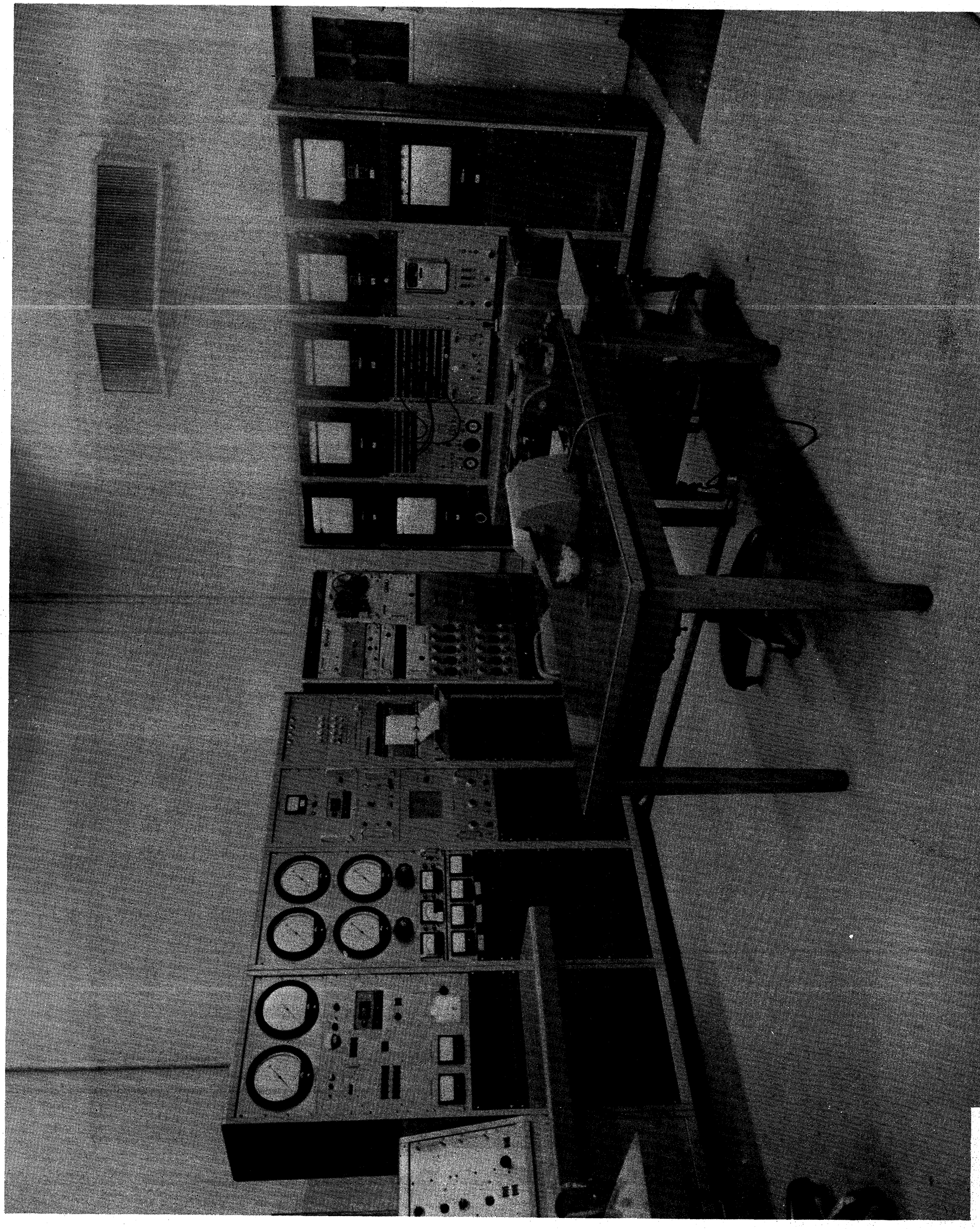

FIG. VII-17 DATA ACQUISITION & RECORDING EQUIPMENT PLASMA ARC FACILITY

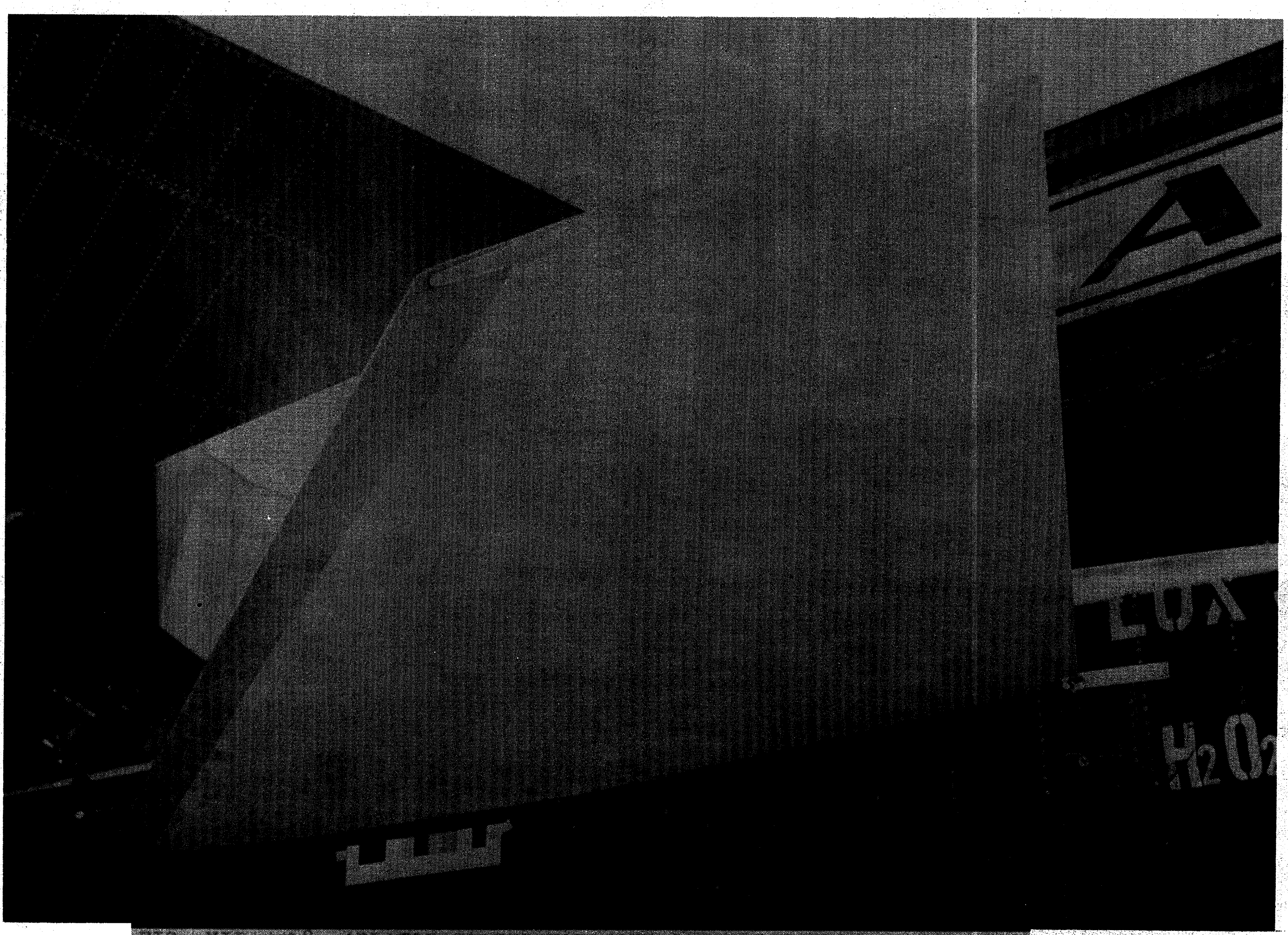

FIG. VII - 18 ABLATOR COATED HORIZONTAL STABILIZER BEFORE FLIGHT

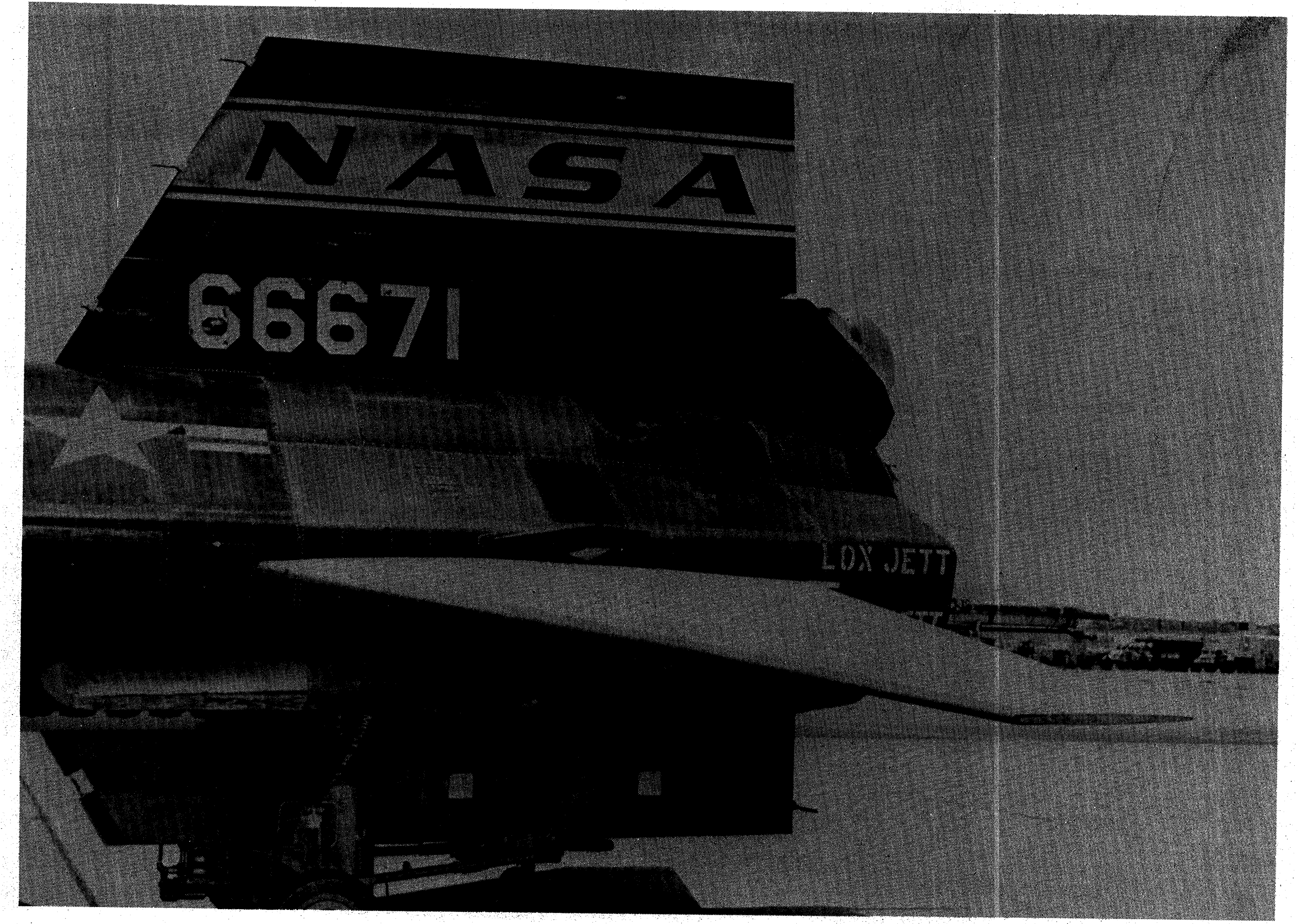

FIG. VII - 19 ABLATOR COATED HORIZONTAL STABILIZER AFTER FLIGHT

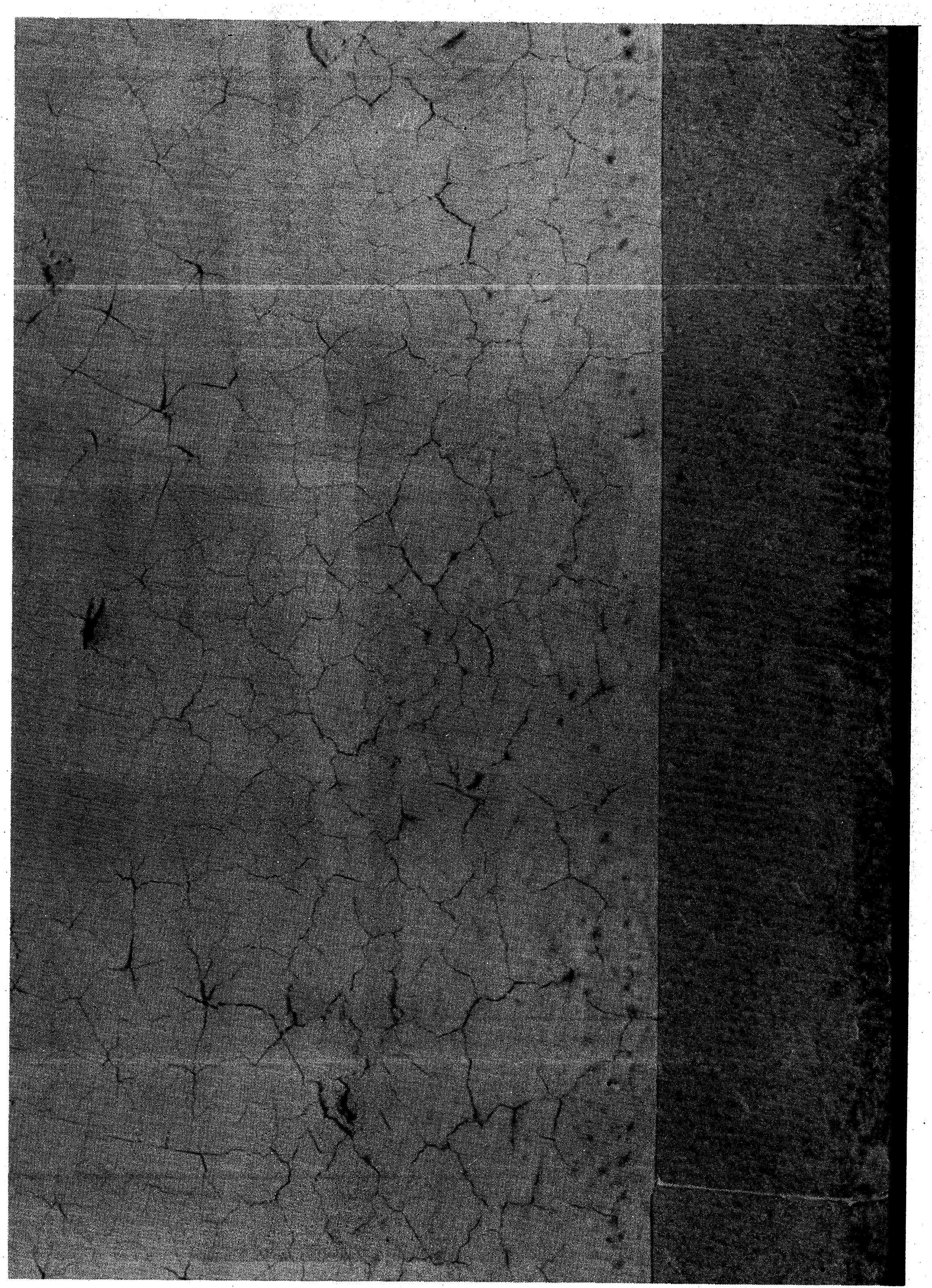

FIG. VII - 20 CLOSE-UP OF ABLATOR SURFACE AFTER FLIGHT

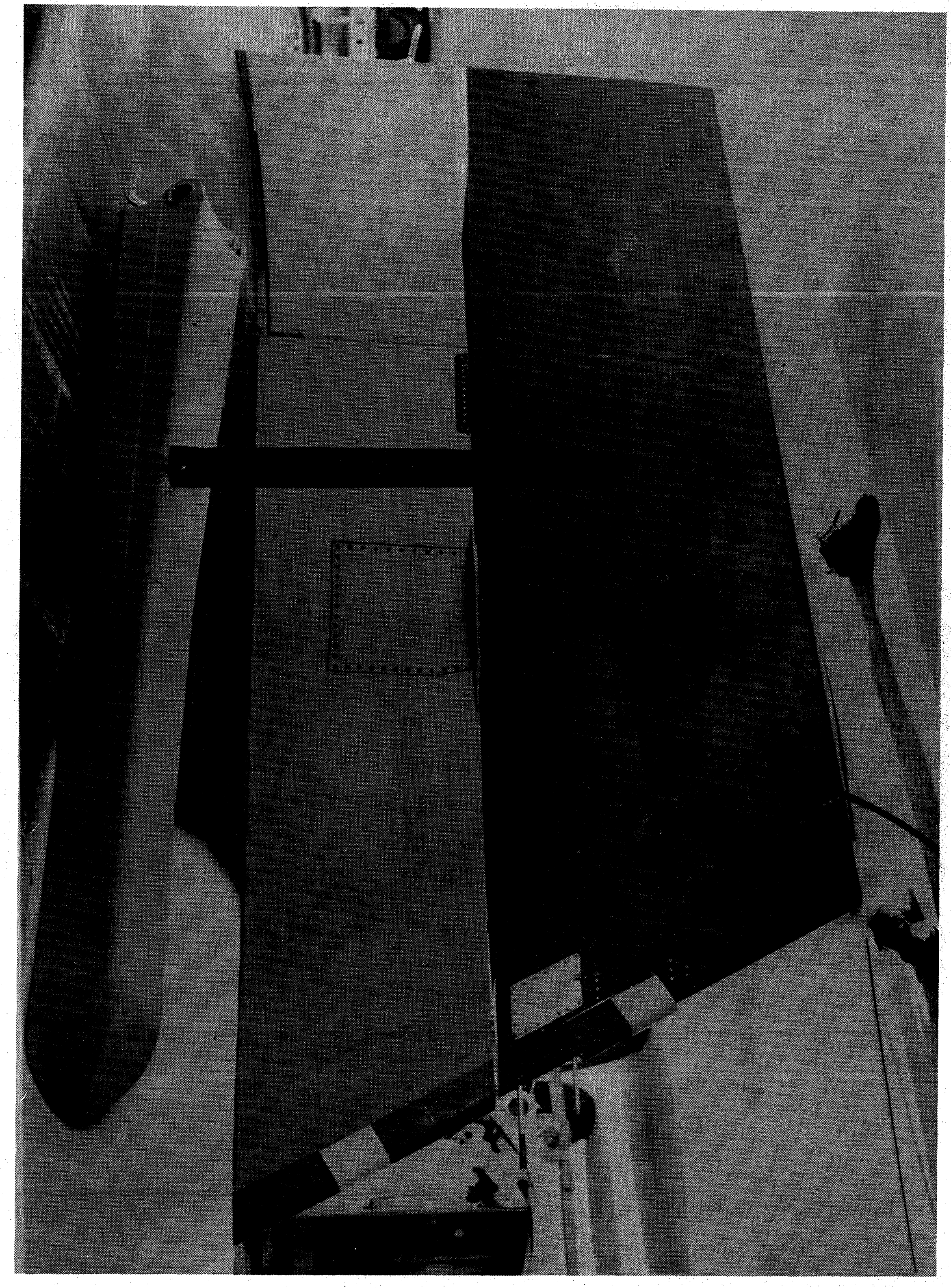

FIG. VII - 21 VENTRAL ABLATOR APPLICATION BEFORE FLIGHT

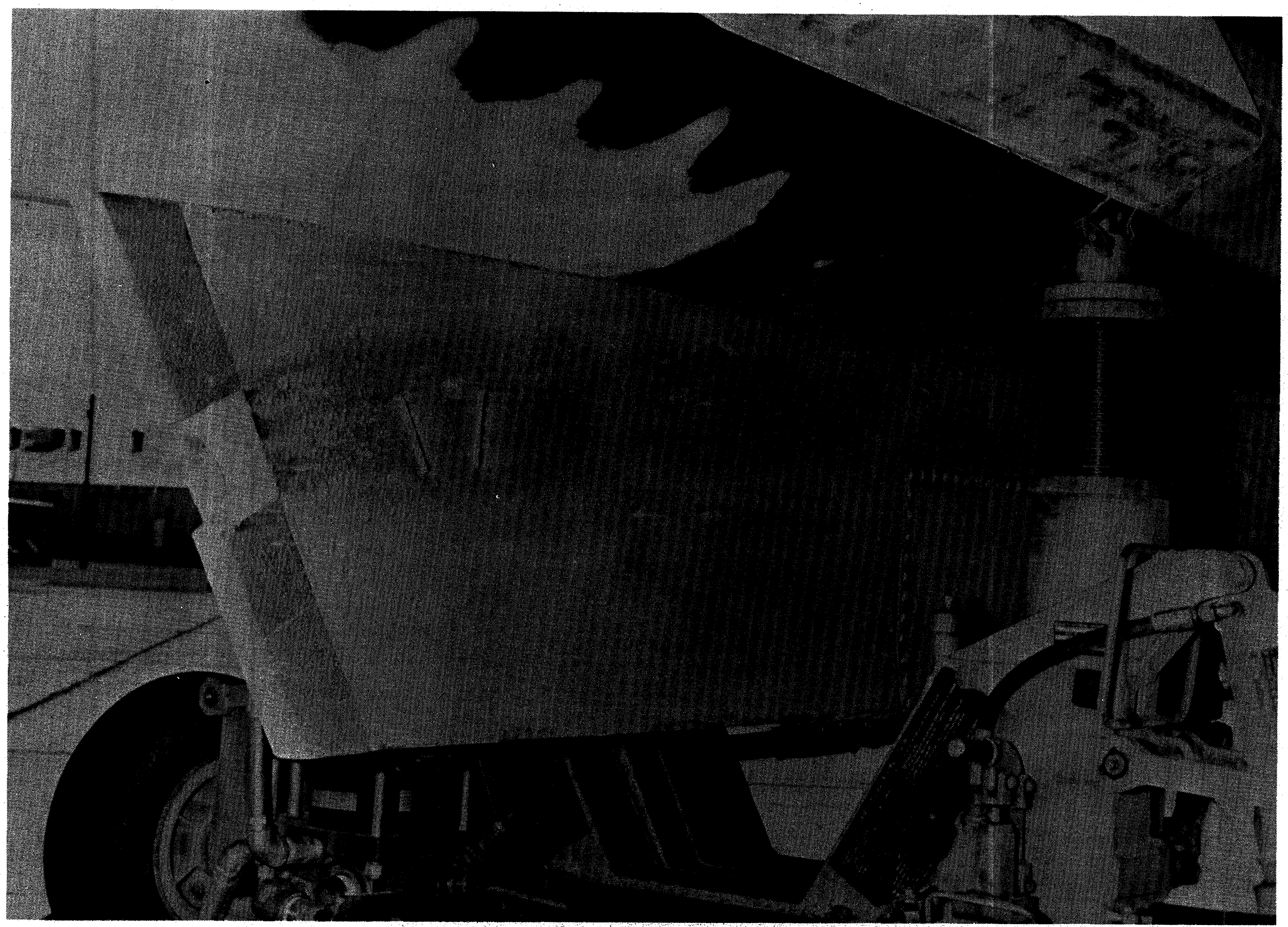

FIG. VII - 22 VENTRAL ABLATOR APPLICATION AFTER FLIGHT

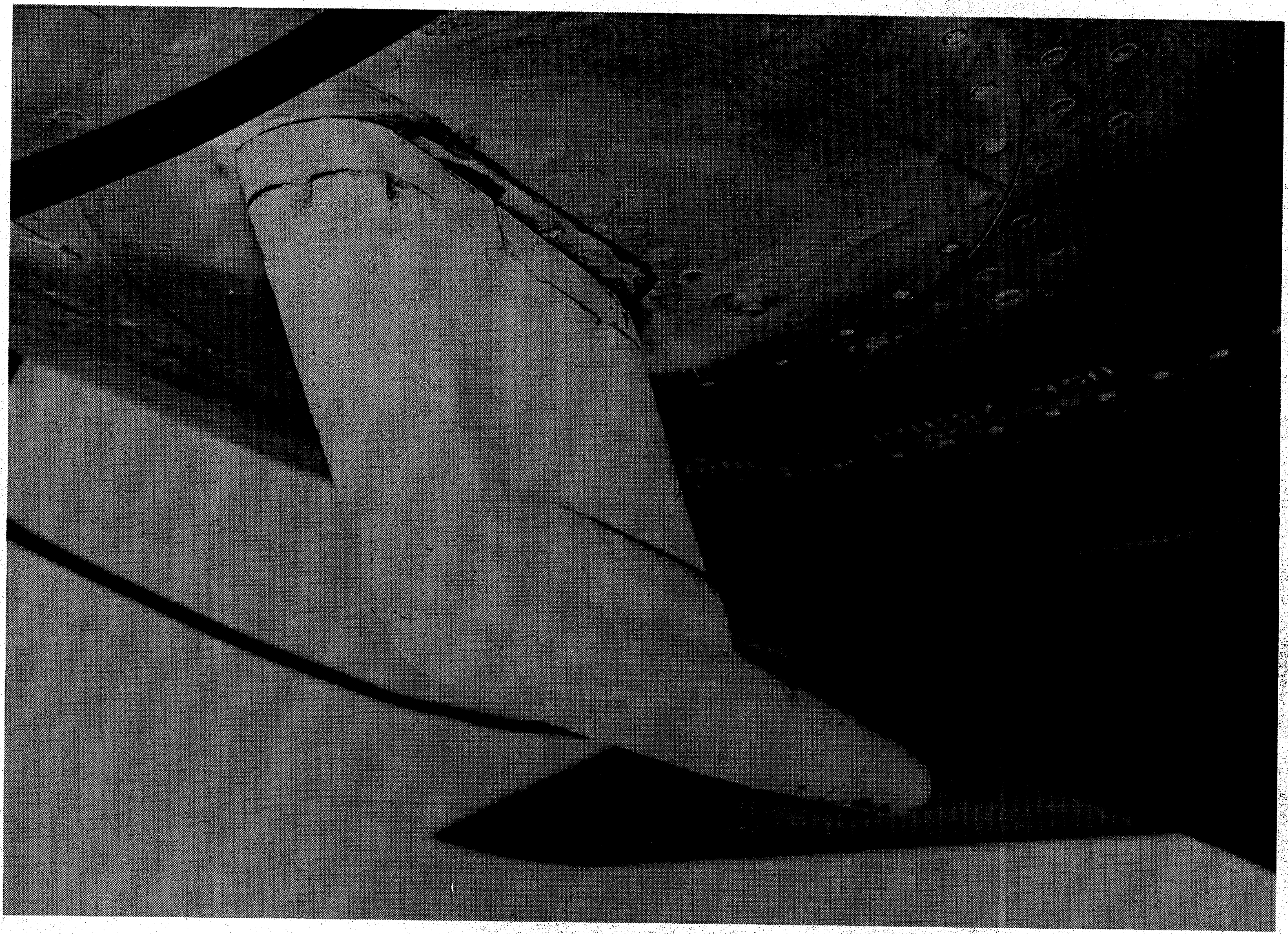

FIG. VII - 23 ABLATOR COATED VANE ANTENNA AFTER FLIGHT

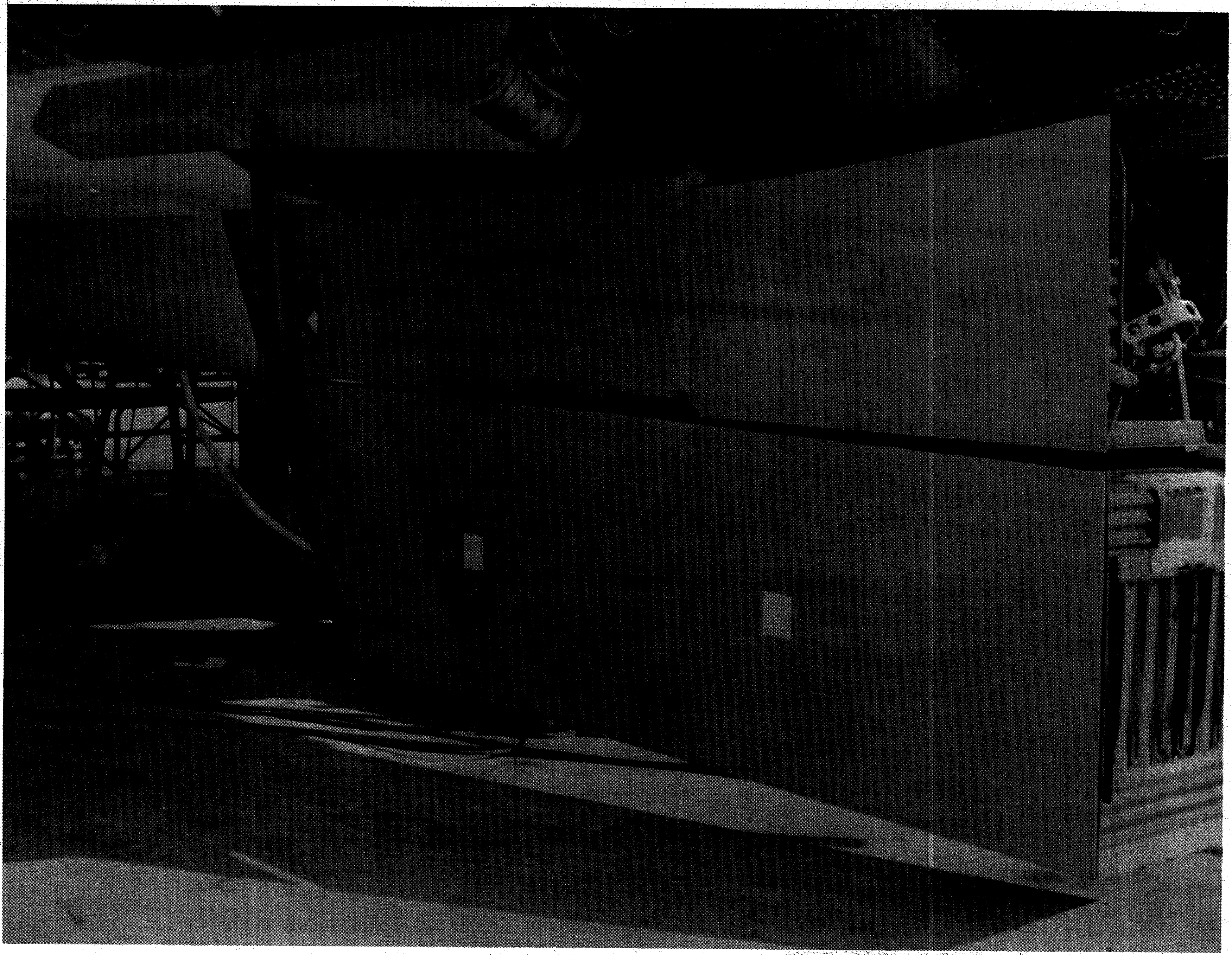

FIG. VII - 24 VENTRAL ABLATOR APPLICATION BEFORE FLIGHT

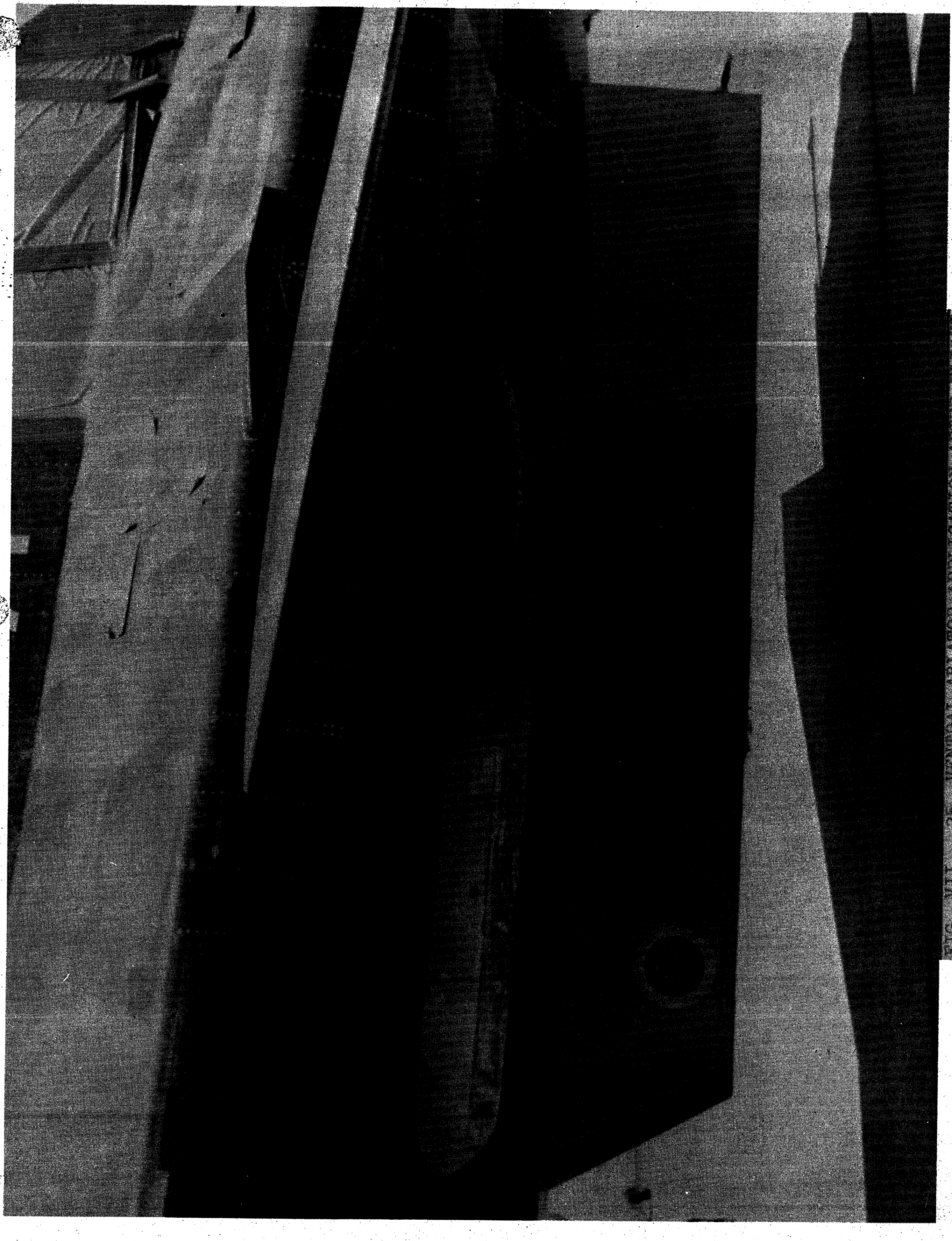

FIG. VIII - 25 VENTRAL ABLATOR APPLICATION AFTER FLIGHT